DATA SHEET

Three Phase Induction Motor - Squirrel Cage

Customer	:

Product line	: W22 Cooling Tower - TEFC - NEMA Premium Efficiency - Derating		
Product code	: 11972828	Catalog #	: 04018ET3ECT324T-W22

Frame	: 324T	Cooling method	: IC411 - TEFC
Insulation class	: F	Mounting	: B3L(E)
Duty cycle	: S1	Rotation	: Both
Ambient temperature	: -20 °C to +40 °C	Starting method	: Direct On Line
Altitude	: 1000 m	Approx. weight	: 492 lb
Protection degree	: IP55	Moment of inertia (J)	: 9.16 sq.ft.lb
Design	: B		

Output		40 HP (30 kW)	40 HP (30 kW)
Poles		4	4
Frequency		60 Hz	60 Hz
Rated voltage		230/460 V	208 V
Rated current		94.2/47.1 A	104 A
L. R. Amperes		574/287 A	635 A
LRC		6.1 Code G	6.1 Code G
No load current		34.6/17.3 A	29.8 A
Rated speed		1775 rpm	1775 rpm
Slip		1.39 %	1.39 %
Rated torque		118 ft.lb	118 ft.lb
Locked rotor torque		230 %	225 %
Breakdown torque		240 %	240 %
Service factor		1.25	1.25
Temperature rise		80 K	80 K
Noise level		66 dB(A)	66.0 dB(A)
Locked rotor time		20 s (hot) 36 s (cold)	20 s (hot) 36 s (cold)
Efficiency (%)	50%	93.6	93.6
	75%	94.1	94.1
	100%	94.1	94.1
Power Factor	50%	0.72	0.72
	75%	0.80	0.80
	100%	0.85	0.85
Losses at normative operating points (speed;torque), in percentage of rated output power			
P1 (0,9;1,0)		6.24	6.24
P2 (0,5;1,0)		5.43	5.43
P3 (0,25;1,0)		4.92	4.92
P4 (0,9;0,5)		2.79	2.79
P5 (0,5;0,5)		2.02	2.02
P6 (0,5;0,25)		1.26	1.26
P7 (0,25;0,25)		0.90	0.90

	Drive end	Non drive end
Bearing type	6312-2RS-C3	6212-2RS-C3
Lubrication interval	-	-
Lubricant amount	-	-
Lubricant type	POLYUREA BASED GREASE	

Foundation loads	
Max. traction	: 830 lb
Max. compression	: 1322 lb

Notes:

Rev.	Changes Summary	Performed	Checked	Date
				2026/11/19

Performed by				
Checked by			Page	Revision
Date	2026/11/19		1/1	0

This document is exclusive property of WEG S/A. Reprinting is not allowed without written authorization of WEG S/A.

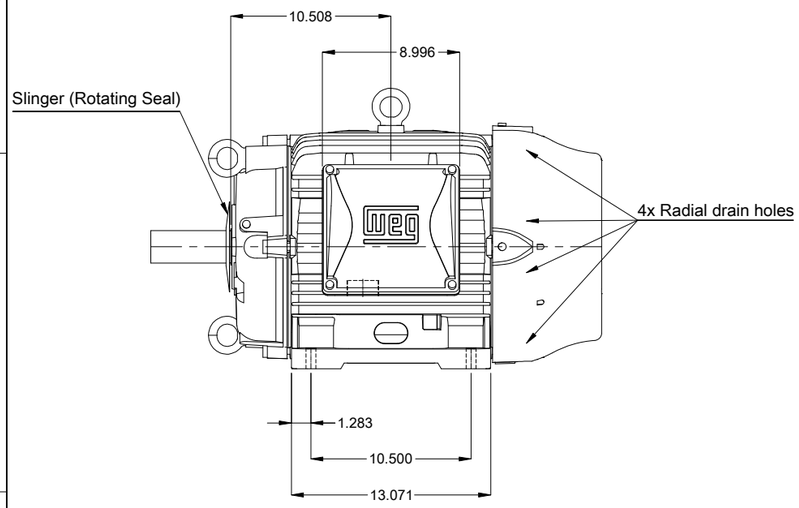

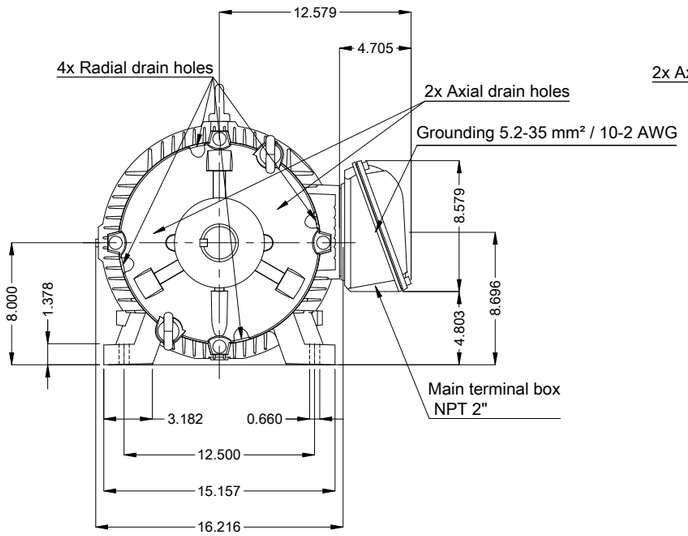

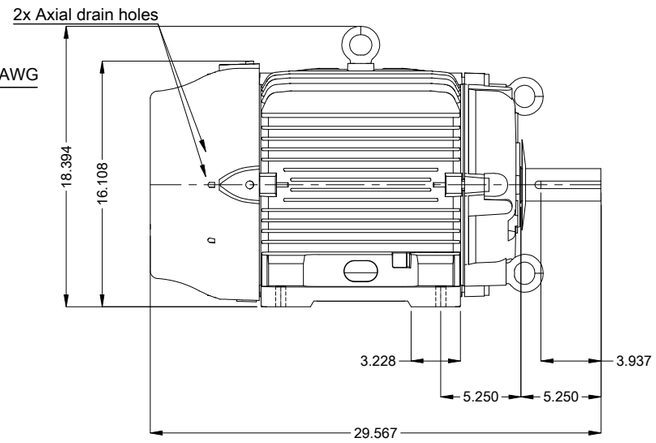

- Without vertical jackscrews
- Color RAL 5009
- Painting plan 222E
- Mounting NEMA F-2
- Mounting B3L(E)

DE Shaft End

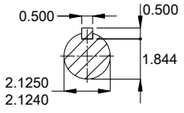

40 HP 04 Poles 60 Hz | A

Scale 1 : 10

ECM	LOC	SUMMARY OF MODIFICATIONS	EXECUTED	CHECKED	RELEASED	DATE	VER
			HYBRISUSER				00

EXECUTED	HYBRISUSER
CHECKED	
RELEASED	
REL. DATE	

THREE PH. MOTOR COOLING TOWER W22 NEMA PREM. EFF.
FRAME 324T IP55 TEFC

PREVIEW

WDD | 00

SHEET 1 / 1

Dimensions in inches

A3

WEG's property. Forbidden reproduction without previous authorization.

W22 COOLING TOWER

CC029A

Inverter Duty Motor
Severe Duty

NEMA PREMIUM

FOR SAFE AREA
MOD.TE1BF0X0N

For 60Hz: Class I, Div 2, Gr. A, B, C, D, 1.15SF-T3
Class I, Zone 2, IIC, 1.15SF-T3
Class II, Div 2, Gr. F, G-T4

C SB US Energy Verified

For 60Hz use on PWM, Gr. A, B, C, D and F,
VT 1000:1, CT 20:1, 1.0SF, T3

MADE IN BRAZIL
11972828

PH 3	FR 324T	HP(kW) 40.0(30.0)		Hz 60
V 230/460		A 94.2/47.1		IP55
NEMA NOM EFF		94.1 %	RPM 1775	
ENCL TEFC	DUTY CONT.		INS. CL. F	ΔT 80 K
PF 0.85		DES B	CODE G	AMB. 40°C
SF 1.25	SFA 118/58.9		ALT 1000 m.a.s.l.	

40HP 30kW 50Hz 380V 57.4A 1460RPM SF1.00 EFF 92.4% (IE2)

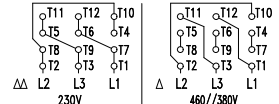



POLYUREA BASED GREASE

522 Lbs