DATA SHEET

Three Phase Induction Motor - Squirrel Cage

Customer	:

Product line	: W22 Cooling Tower - TEFC - NEMA Premium Efficiency - Derating		
Product code	: 11972829	Catalog #	: 03018ET3ECT286TF1-W2

Frame	: 284/6T	Cooling method	: IC411 - TEFC
Insulation class	: F	Mounting	: B3R(D)
Duty cycle	: S1	Rotation	: Both
Ambient temperature	: -20 °C to +40 °C	Starting method	: Direct On Line
Altitude	: 1000 m	Approx. weight	: 437 lb
Protection degree	: IP55	Moment of inertia (J)	: 5.85 sq.ft.lb
Design	: B		

Output		30 HP (22 kW)	30 HP (22 kW)
Poles		4	4
Frequency		60 Hz	60 Hz
Rated voltage		230/460 V	208 V
Rated current		70.2/35.1 A	77.6 A
L. R. Amperes		428/214 A	474 A
LRC		6.1 Code G	6.1 Code G
No load current		24.6/12.3 A	21.2 A
Rated speed		1770 rpm	1770 rpm
Slip		1.67 %	1.67 %
Rated torque		89.0 ft.lb	89.0 ft.lb
Locked rotor torque		240 %	240 %
Breakdown torque		240 %	240 %
Service factor		1.25	1.25
Temperature rise		80 K	80 K
Noise level		63 dB(A)	63.0 dB(A)
Locked rotor time		20 s (hot) 36 s (cold)	20 s (hot) 36 s (cold)
Efficiency (%)	50%	93.0	93.0
	75%	93.0	93.0
	100%	93.6	93.6
Power Factor	50%	0.70	0.70
	75%	0.80	0.80
	100%	0.84	0.84
Losses at normative operating points (speed;torque), in percentage of rated output power			
P1 (0,9;1,0)		6.77	6.77
P2 (0,5;1,0)		5.80	5.80
P3 (0,25;1,0)		5.23	5.23
P4 (0,9;0,5)		3.09	3.09
P5 (0,5;0,5)		2.18	2.18
P6 (0,5;0,25)		1.36	1.36
P7 (0,25;0,25)		0.95	0.95

	Drive end	Non drive end
Bearing type	6311-2RS-C3	6211-2RS-C3
Lubrication interval	-	-
Lubricant amount	-	-
Lubricant type	POLYUREA BASED GREASE	

Foundation loads	
Max. traction	: 701 lb
Max. compression	: 1138 lb

Notes:

Rev.	Changes Summary	Performed	Checked	Date
				2026/11/18

Performed by				
Checked by			Page	Revision
Date	2026/11/18		1/1	0

This document is exclusive property of WEG S/A. Reprinting is not allowed without written authorization of WEG S/A.

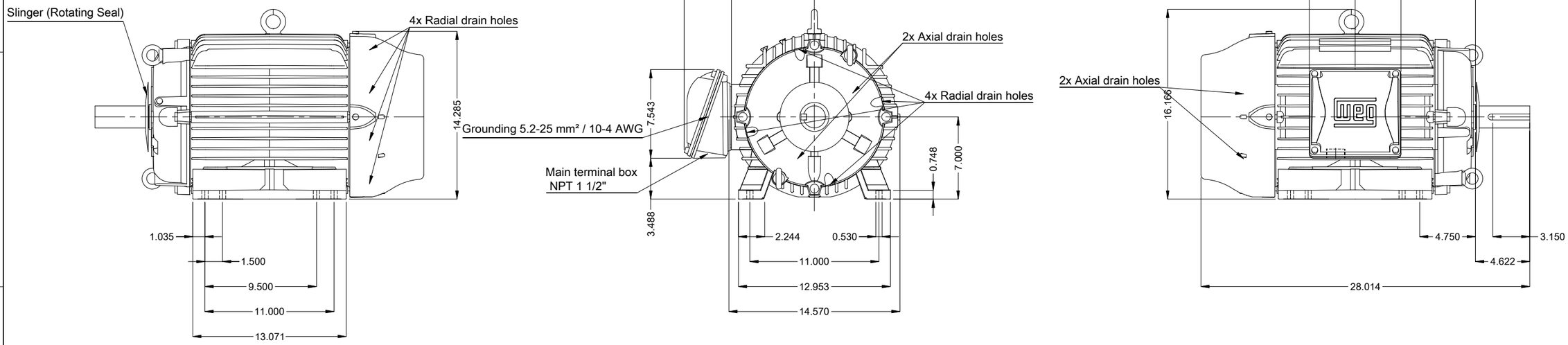

DE Shaft End

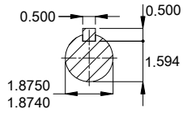

Without vertical jackscrews
Color RAL 5009
Painting plan 222E
Mounting NEMA F-1
Mounting B3R(D)

30 HP 04 Poles 60 Hz | A

Scale 1 : 9

ECM	LOC	SUMMARY OF MODIFICATIONS	EXECUTED	CHECKED	RELEASED	DATE	VER
			HYBRISUSER				00

EXECUTED	HYBRISUSER
CHECKED	
RELEASED	
REL. DATE	

THREE PH. MOTOR COOLING TOWER W22 NEMA PREM. EFF.
FRAME 284/6T IP55 TEFC

PREVIEW

WDD | 00

SHEET 1 / 1

Dimensions in inches

A3

WEG's property. Forbidden reproduction without previous authorization.

W22 COOLING TOWER

CC029A

Inverter Duty Motor
Severe Duty

NEMA PREMIUM

FOR SAFE AREA
MOD.TE1BF0X0N

For 60Hz: Class I, Div 2, Gr. A, B, C, D, 1.15SF-T3
Class I, Zone 2, IIC, 1.15SF-T3
Class II, Div 2, Gr. F, G-T4

C SB US Energy Verified

For 60Hz use on PWM, Gr. A, B, C, D and F,
VT 1000:1, CT 20:1, 1.0SF, T3

MADE IN BRAZIL
11972829

PH 3	FR 284/6T	HP(kW) 30.0(22.0)		Hz 60
V 230/460		A 70.2/35.1		IP55
NEMA NOM EFF		93.6 %	RPM 1770	
ENCL TEFC	DUTY CONT.		INS. CL. F	ΔT 80 K
PF 0.84		DES B	CODE G	AMB. 40°C
SF 1.25	SFA 87.8/43.9		ALT 1000 m.a.s.l.	

30HP 22kW 50Hz 380V 43.1A 1455RPM SF1.00 EFF 90.2% (IE1)

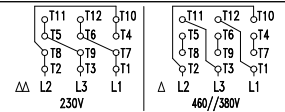

→6311-2RS-C3
→6211-2RS-C3

POLYUREA BASED GREASE

441 Lbs