DATA SHEET

Three Phase Induction Motor - Squirrel Cage

Customer	:

Product line	: W22 Cooling Tower - TEFC - NEMA Premium Efficiency - Derating		
Product code	: 11972328	Catalog #	: 02518ET3ECT284T-W22

Frame	: 284T	Cooling method	: IC411 - TEFC
Insulation class	: F	Mounting	: B3L(E)
Duty cycle	: S1	Rotation	: Both
Ambient temperature	: -20 °C to +40 °C	Starting method	: Direct On Line
Altitude	: 1000 m	Approx. weight	: 388 lb
Protection degree	: IP55	Moment of inertia (J)	: 5.11 sq.ft.lb
Design	: B		

Output		25 HP (18.5 kW)	25 HP (18.5 kW)
Poles		4	4
Frequency		60 Hz	60 Hz
Rated voltage		230/460 V	208 V
Rated current		59.0/29.5 A	65.2 A
L. R. Amperes		366/183 A	404 A
LRC		6.2 Code G	6.2 Code G
No load current		22.0/11.0 A	19.0 A
Rated speed		1770 rpm	1770 rpm
Slip		1.67 %	1.67 %
Rated torque		74.1 ft.lb	74.1 ft.lb
Locked rotor torque		240 %	240 %
Breakdown torque		270 %	270 %
Service factor		1.25	1.25
Temperature rise		80 K	80 K
Noise level		63 dB(A)	63.0 dB(A)
Locked rotor time		24 s (hot) 43 s (cold)	24 s (hot) 43 s (cold)
Efficiency (%)	50%	92.4	92.4
	75%	93.0	93.0
	100%	93.6	93.6
Power Factor	50%	0.70	0.70
	75%	0.80	0.80
	100%	0.84	0.84
Losses at normative operating points (speed;torque), in percentage of rated output power			
P1 (0,9;1,0)		6.75	6.75
P2 (0,5;1,0)		5.83	5.83
P3 (0,25;1,0)		5.32	5.32
P4 (0,9;0,5)		3.15	3.15
P5 (0,5;0,5)		2.23	2.23
P6 (0,5;0,25)		1.42	1.42
P7 (0,25;0,25)		1.01	1.01

	Drive end	Non drive end
Bearing type	6311-2RS-C3	6211-2RS-C3
Lubrication interval	-	-
Lubricant amount	-	-
Lubricant type	POLYUREA BASED GREASE	

Foundation loads	
Max. traction	: 668 lb
Max. compression	: 1056 lb

Notes:

Rev.	Changes Summary	Performed	Checked	Date
				2026/11/19

Performed by				
Checked by			Page	Revision
Date	2026/11/19		1/1	0

This document is exclusive property of WEG S/A. Reprinting is not allowed without written authorization of WEG S/A.

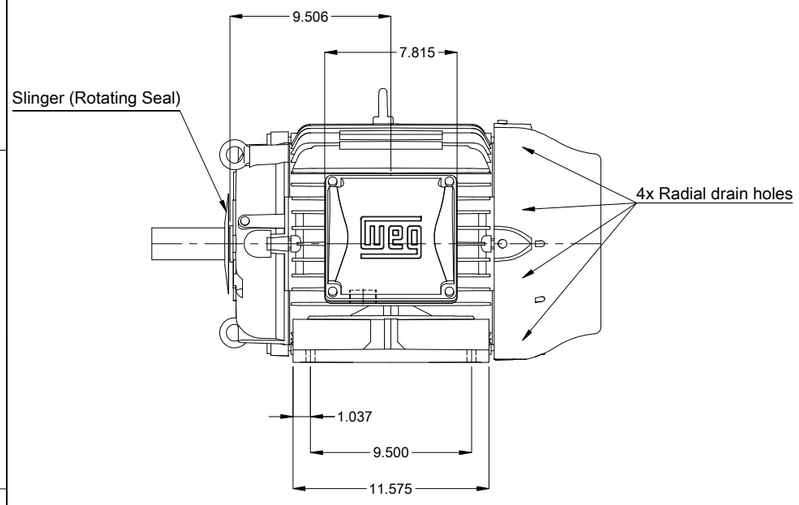

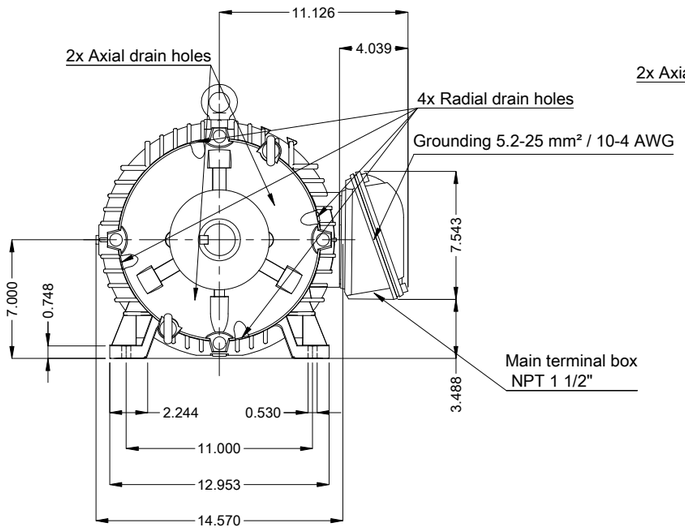

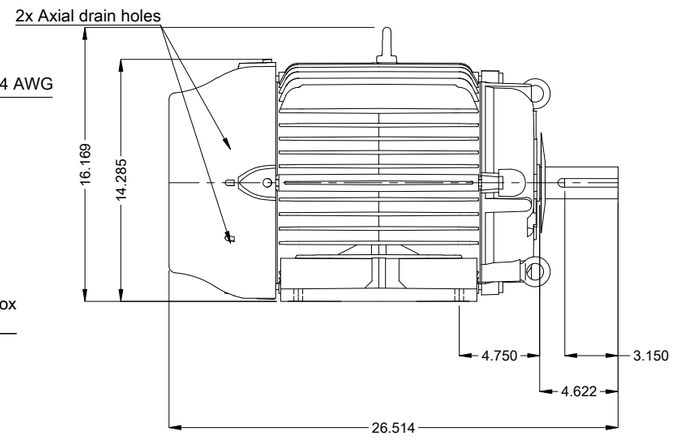

Without vertical jackscrews
Color RAL 5009
Painting plan 222E
Mounting NEMA F-2
Mounting B3L(E)

DE Shaft End

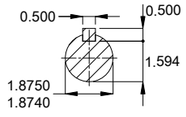

25 HP 04 Poles 60 Hz

A

Scale 1 : 9

ECM	LOC	SUMMARY OF MODIFICATIONS	EXECUTED	CHECKED	RELEASED	DATE	VER
			HYBRISUSER				00

EXECUTED	HYBRISUSER
CHECKED	
RELEASED	
REL. DATE	

THREE PH. MOTOR COOLING TOWER W22 NEMA PREM. EFF.
FRAME 284T IP55 TEFC

PREVIEW

WDD 00

SHEET 1 / 1

Dimensions in inches

A3

WEG's property. Forbidden reproduction without previous authorization.

W22 COOLING TOWER

CC029A

Inverter Duty Motor
Severe Duty

NEMA PREMIUM

FOR SAFE AREA
MOD.TE1BF0X0N

For 60Hz: Class I, Div 2, Gr. A, B, C, D, 1.15SF-T3
Class I, Zone 2, IIC, 1.15SF-T3
Class II, Div 2, Gr. F, G-T4

Energy Verified

For 60Hz use on PWM, Gr. A, B, C, D and F,
VT 1000:1, CT 20:1, 1.0SF, T3

MADE IN BRAZIL
11972328

PH 3	FR 284T	HP(kW) 25.0(18.5)		Hz 60
V 230/460		A 59.0/29.5		IP55
NEMA NOM EFF		93.6 %	RPM 1770	
ENCL TEFC	DUTY CONT.		INS. CL. F	ΔT 80 K
PF 0.84		DES B	CODE G	AMB. 40°C
SF 1.25	SFA 73.8/36.9		ALT 1000 m.a.s.l.	

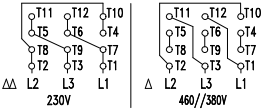



POLYUREA BASED GREASE

388 Lbs

25HP 18.5kW 50Hz 380V 35.9A 1455RPM SF1.00 EFF 91.0% (IE1)