DATA SHEET

Single Phase Induction Motor - Squirrel Cage

Customer :

Product line : W22 Bomba JM
Product code : 14185023 Catalog # : 01036ES1C215JM-W22

Frame	: 213/5JM	Locked rotor time	: 8 s (hot) 14 s (cold)
Output	: 10 HP (7.5 kW)	Duty cycle	: S1
Poles	: 2	Ambient temperature	: -20 °C to +40 °C
Frequency	: 60 Hz	Altitude	: 1000 m.a.s.l
Rated voltage	: 208-230 V	Protection degree	: IP55
Rated current	: 41.8-38.9 A	Cooling method	: IC411 - TEFC
L. R. Amperes	: 272 A	Mounting	: B34R(D)
LRC	: 7.0 Code G	Rotation[1]	: Both
No load current	: 6.90 A	Noise level[2]	: 72 dB(A)
Rated speed	: 3515 rpm	Starting method	: Direct On Line
Slip	: 2.36 %	Approx. weight[3]	: 165.4 lb
Rated torque	: 14.9 ft.lb	Design	:
Locked rotor torque	: 230 %		
Pull up torque	: 185 %		
Breakdown torque	: 290 %		
Insulation class	: F		
Service factor	: 1.15		
Moment of inertia (J)	: 0.5292 sq.ft.lb		

Output	50%	75%	100%
Efficiency (%)	82.0	85.5	86.5
Power Factor	0.96	0.97	0.97

	Drive end	Non drive end
Bearing type	6309-ZZ-C3	6206-ZZ
Lubrication interval	-	-
Lubricant amount	-	-
Lubricant type	POLYUREA BASED GREASE	

Load type	: -
Load torque	: -
Load inertia (J=GD²/4)	: -

Foundation loads
Max. traction : -
Max. compression : -

Notes:

Standards

Specification : MG1 - Part 10
Test : MG1 - Part 12
Noise : MG1 - Part 9

Vibration :
Tolerance : MG1 - Part 12

This revision replaces and cancel the previous one, which must be eliminated..
(1) Looking the motor from the shaft end.
(2) Measured at 1m and with tolerance of +0dB(A).
(3) Approximate weight, subject to be changed after manufacturing process.
(4) At 100% of full load.

These are average values based on tests with sinusoidal power supply, subject to the tolerances stipulated in NEMA MG 1-12.

Rev.	Changes Summary	Performed	Checked	Date
				2026/11/19

Performed by				
Checked by			Page	Revision
Date	2026/11/19		1/1	0

This document is exclusive property of WEG S/A. Reprinting is not allowed without written authorization of WEG S/A.

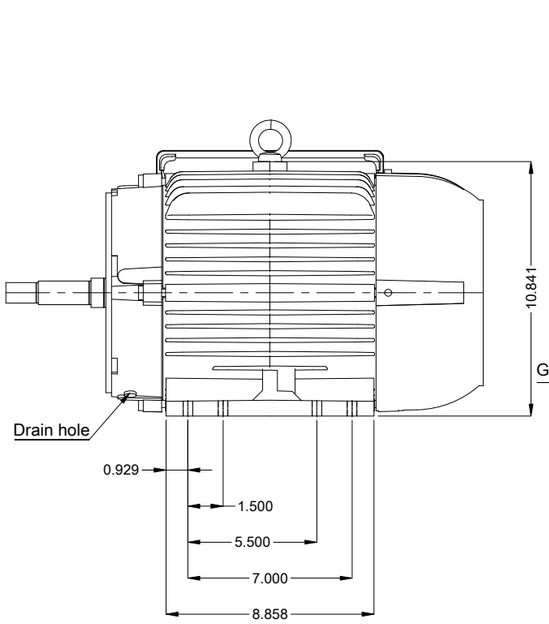

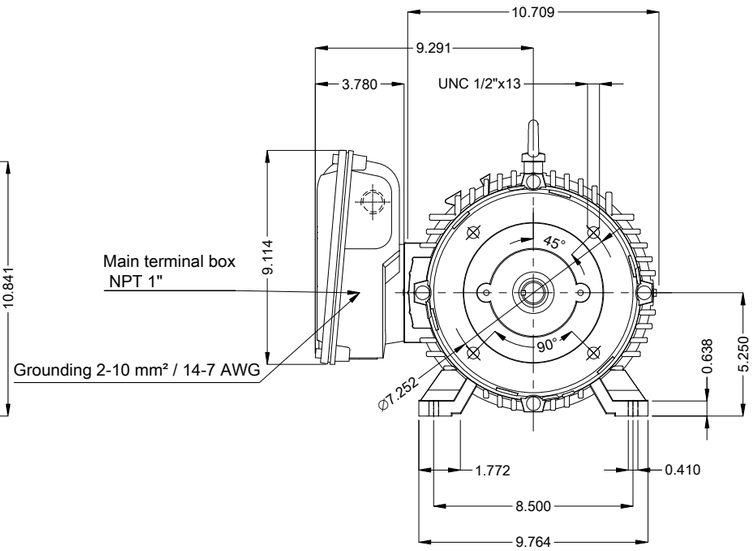

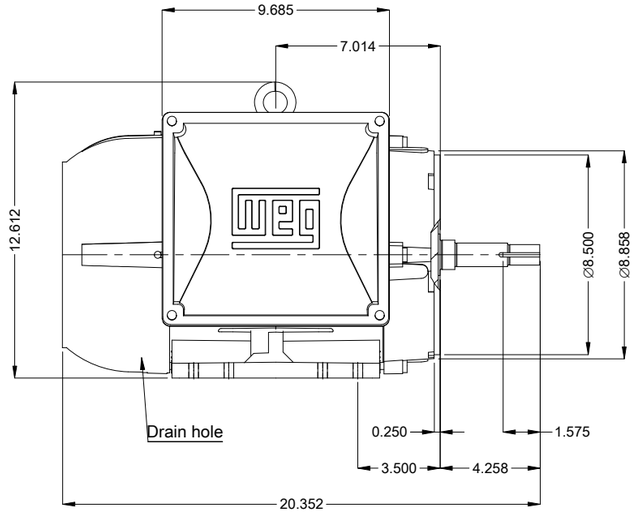

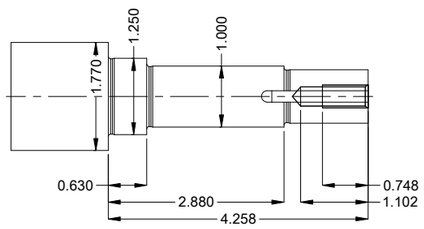

DE Shaft End

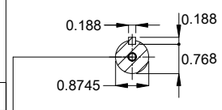

EUNC 3/8"-16 WEG WPR-7309

Mounting NEMA F-1

Mounting B34D

10 HP 02 Poles 60 Hz

A

Scale 2 : 13

ECM	LOC	SUMMARY OF MODIFICATIONS	EXECUTED	CHECKED	RELEASED	DATE	VER
			HYBRISUSER				00

EXECUTED	HYBRISUSER
CHECKED	
RELEASED	
REL. DATE	

SINGLE PH. MOTOR W22 PUMP JM
FRAME 213/5JM IP55 TEFC

PREVIEW

WDD 00

SHEET 1 / 1

Dimensions in inches

A3

WEG's property. Forbidden reproduction without previous authorization.

Mod.ME1BF0X0X

MADE IN BRAZIL
14185023

MODEL 01036ES1C215JM-W22

Electric Motor
Severe Duty

PH1 60Hz Fr. 213/5JM 1000m.a.s.l. IP55 TEFC 171lb

V 230	A 38.9
HP 10	kW 7.5
SF 1.15	SFA 45.2
RPM 3515	PF 0.97
AMB 40°C	INS cl. F DT80K NEMA NOM EFF 86.5%
DUTY CONT.	DES - Code G

USABLE @208V 41.8A SF 1.00

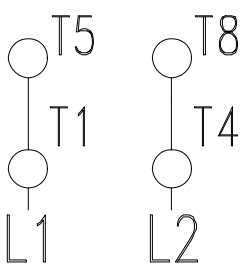

TO REVERSE ROTATION INVERT T5 AND T8

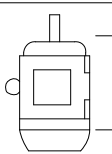

POLYUREA BASED GREASE

