DATA SHEET

Three Phase Induction Motor - Squirrel Cage

Customer	:

Product line	: W22 Cooling Tower - TEFC - NEMA Premium Efficiency - Derating		
Product code	: 11972285	Catalog #	: 00718ET3ECT213T-W22

Frame	: 213T	Cooling method	: IC411 - TEFC
Insulation class	: F	Mounting	: B3L(E)
Duty cycle	: S1	Rotation	: Both
Ambient temperature	: -20 °C to +40 °C	Starting method	: Direct On Line
Altitude	: 1000 m	Approx. weight	: 154 lb
Protection degree	: IP55	Moment of inertia (J)	: 1.34 sq.ft.lb
Design	: B		

Output		7.5 HP (5.5 kW)	7.5 HP (5.5 kW)
Poles		4	4
Frequency		60 Hz	60 Hz
Rated voltage		230/460 V	208 V
Rated current		18.4/9.18 A	19.9 A
L. R. Amperes		130/65.2 A	141 A
LRC		7.1 Code H	7.1 Code H
No load current		7.80/3.90 A	6.73 A
Rated speed		1765 rpm	1765 rpm
Slip		1.94 %	1.94 %
Rated torque		22.3 ft.lb	22.3 ft.lb
Locked rotor torque		220 %	220 %
Breakdown torque		280 %	280 %
Service factor		1.25	1.25
Temperature rise		80 K	80 K
Noise level		58 dB(A)	58.0 dB(A)
Locked rotor time		20 s (hot) 36 s (cold)	20 s (hot) 36 s (cold)
Efficiency (%)	50%	89.5	89.5
	75%	91.0	91.0
	100%	91.7	91.7
Power Factor	50%	0.66	0.66
	75%	0.76	0.76
	100%	0.82	0.82
Losses at normative operating points (speed;torque), in percentage of rated output power			
P1 (0,9;1,0)		10.21	10.21
P2 (0,5;1,0)		9.02	9.02
P3 (0,25;1,0)		8.45	8.45
P4 (0,9;0,5)		4.85	4.85
P5 (0,5;0,5)		3.56	3.56
P6 (0,5;0,25)		2.38	2.38
P7 (0,25;0,25)		1.74	1.74

	Drive end	Non drive end
Bearing type	6308-2RS	6207-2RS
Lubrication interval	-	-
Lubricant amount	-	-
Lubricant type	POLYUREA BASED GREASE	

Foundation loads	
Max. traction	: 271 lb
Max. compression	: 425 lb

Notes:

Rev.	Changes Summary	Performed	Checked	Date
				2026/11/19

Performed by				
Checked by			Page	Revision
Date	2026/11/19		1/1	0

This document is exclusive property of WEG S/A. Reprinting is not allowed without written authorization of WEG S/A.

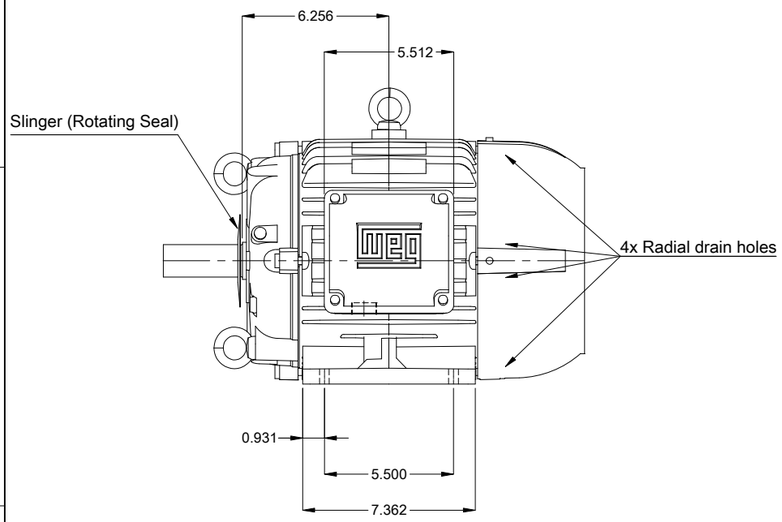

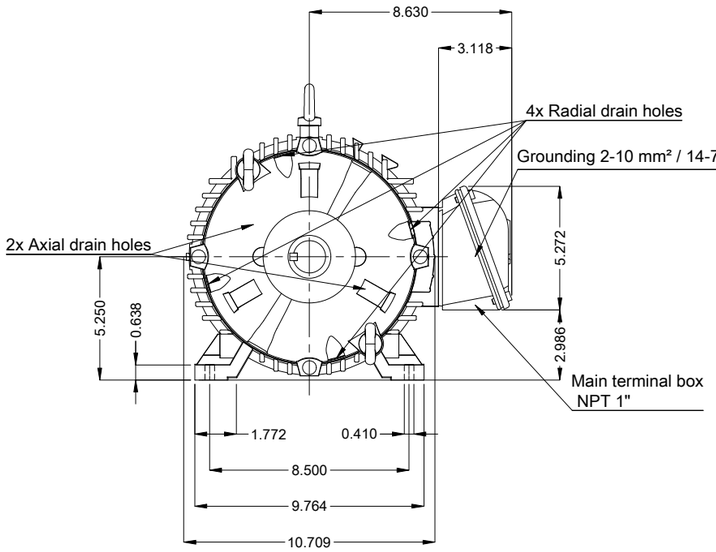

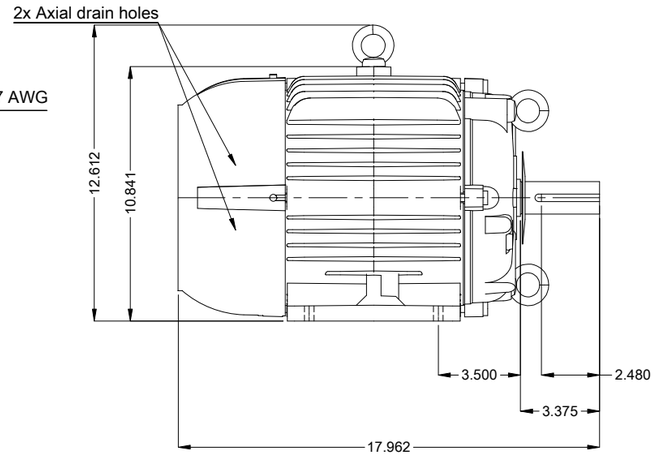

Color RAL 5009	
Painting plan 202E	
Mounting NEMA F-2	
Mounting B3L(E)	

DE Shaft End

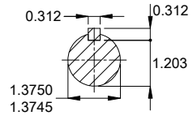

7.5 HP 04 Poles 60 Hz | A

Scale 2 : 13

ECM	LOC	SUMMARY OF MODIFICATIONS	EXECUTED	CHECKED	RELEASED	DATE	VER
			HYBRISUSER				00

EXECUTED	HYBRISUSER
CHECKED	
RELEASED	
REL. DATE	

THREE PH. MOTOR COOLING TOWER W22 NEMA PREM. EFF.
FRAME 213T IP55 TEFC

PREVIEW

WDD 00

SHEET 1 / 1

Dimensions in inches

A3

WEG's property. Forbidden reproduction without previous authorization.

W22 NEMA PREMIUM

CC029A

COOLING TOWER

Inverter Duty Motor
Severe Duty

11972285

MADE IN BRAZIL

PH 3	FR 213T	HP(kW) 7.5(5.5)	Hz 60	SF 1.25	PF 0.82
V 230/460	A 18.4/9.18	RPM 1765	INS. CL. F	ΔT 80 K	
NEMA NOM EFF 91.7 %	DES B	DUTY CONT.	AMB 40°C		
ENCL TEFC	IP55	SFA 23.0/11.5		ALT 1000 m.a.s.l.	
7.5HP 5.5kW 50Hz 380V 11.0A 1455RPM SF1.25 EFF 89.6% (IE3)				CODE H	

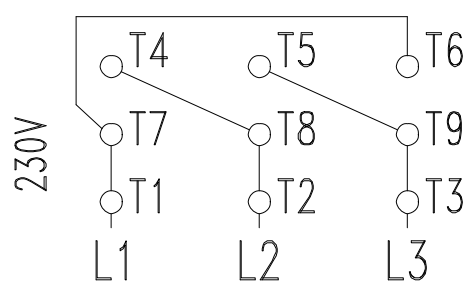

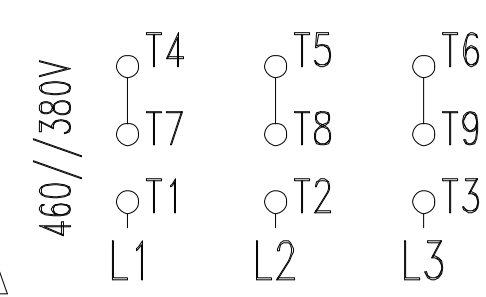

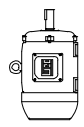

6308-2RS

6207-2RS

POLYUREA BASED GREASE

161 Lbs

For 60Hz: Class I, Div 2, Gr. A, B, C, D, 1.15SF-T3
Class I, Zone 2, IIC, 1.15SF-T3
Class II, Div 2, Gr. F, G-T4

For use on PWM, Gr. A, B, C, D and F
VT 1000:1, CT 20:1, 1.0SF, T3

C SA® US
Energy Verified

c UL us
LISTED
3PT9

FOR SAFE AREA
MOD.TE1BF0X0N