	Technical Data Submersible Pump - GST 25-04	Revision no.	Page: 1

	Receiver	From
Company name		
Respons. Department		
Person in charge		
Phone number		
Fax no		
E-mail address		

Brand: Gol Pumps
Model: GST 25-04

Weight (lb)		
Pump	Motor	Pump + Motor
5.3	20.5	25.8

Cable	
Length (Ft)	AWG
3.9	14

Dimensions:

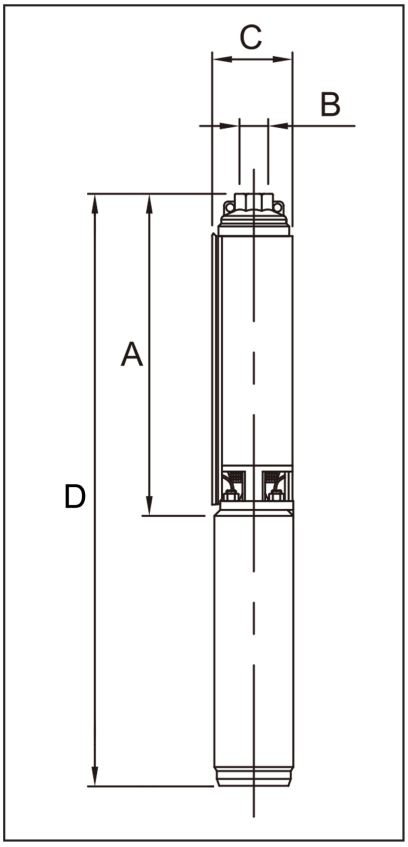

Outlet	Motor Dia.	Dimensions (inch)			
		A	B	C	D
NPT 1 1/2"	4"	9.7	1 1/2	3.9	21.3

Project	Project ID	Created by	Created on	Last update

Performance Curves
Submersible Pump - GST 25-04

Revision no.

Page: 2

	Receiver	From
Company name		
Respons. Department		
Person in charge		
Phone number		
Fax no		
E-mail address		

Pump Model	Motor		Q Capacity 3500RPM								
			Gal/Min	0	13.2	15.9	18.5	21.1	23.8	26.4	31.7
	kW	HP	Head in Feet	118	108	102	95	89	75	66	39
GST 25-04	0.37	0.5									

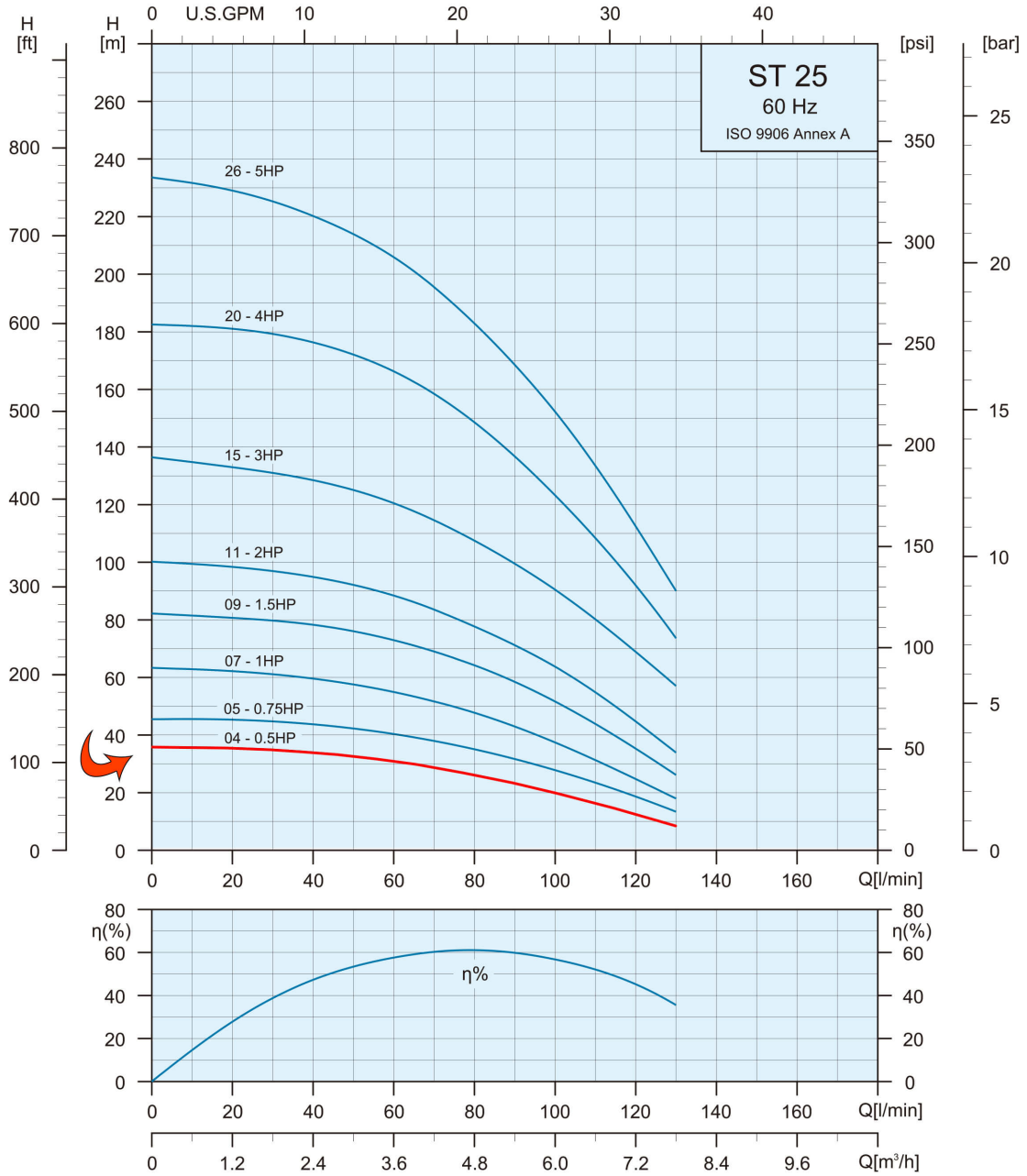

Project	Project ID	Created by	Created on	Last update

Part List and Materials

Submersible Pump - GST 25-04

Revision no.

	Receiver	From
Company name		
Respons. Department		
Person in charge		
Phone number		
Fax no		
E-mail address		

Motor Model	P2		S.F	Voltage	Phase	Wire	In	Imax	Istart	PF (%)		Efficiency (%)		RPM	Thrust	Capacitor
	kW	HP		V	PH		A	A	A	Allowable Load	Overload Factor	Allowable Load	Overload Factor		N	UF
4CS2506M	0.37	0.5	1.6	230	Single	2	3.3	4.5	15.8	0.93	0.96	52.8	62.1	3450	2000	16UF 450V

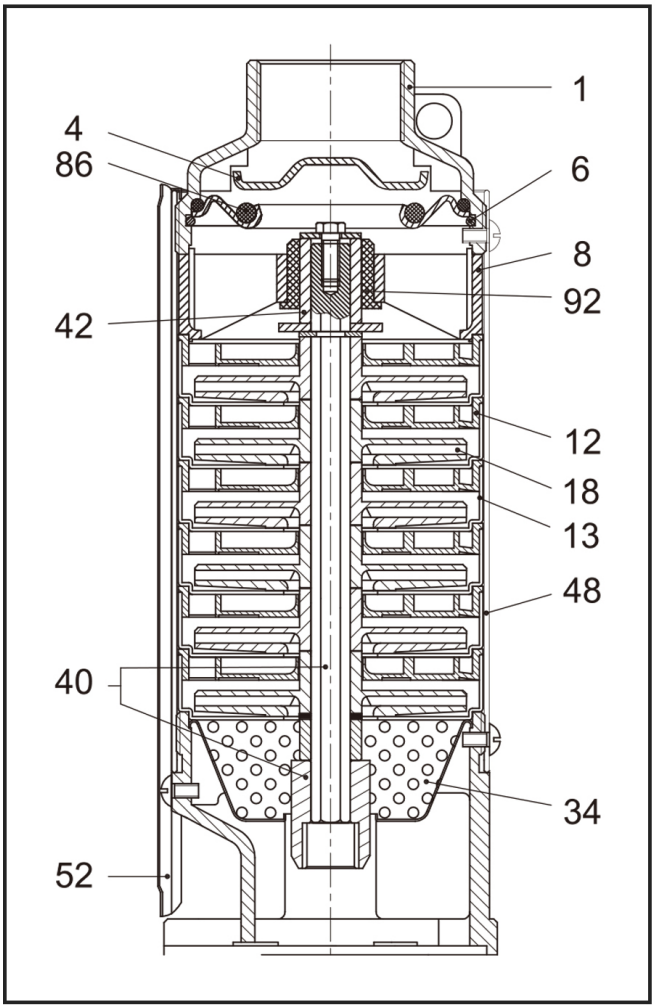

No.	Part Name	Materials
1	Discharge Head	AISI 304
4	Check Valve Cone	AISI 304
6	Check Valve Retaining Ring	AISI 304
8	Bearing Spider	Glass Filled Polycarbonate
12	Diffuser	Glass Filled Polycarbonate
13	Bowl	AISI 304
18	Impeller	Noryl
34	Strainer	AISI 304
40	Pump Shaft / Coupling	AISI 304
42	Shaft Sleeve	AISI 304 or Norly
48	Pump Casing	AISI 304
52	Cable Guard	AISI 304
86	O-Ring	NBR
92	Bearing	Polyacetal

Project	Project ID	Created by	Created on	Last update