| | Technical Data<br>Submersible Pump - GSP 90-18 | Revision no. | Page:<br>1 |
|---|---|---|---|

| | Receiver | From |
|---|---|---|
| Company name | | |
| Respons. Department | | |
| Person in charge | | |
| Phone number | | |
| Fax no | | |
| E-mail address | | |

**Brand: Gol Pumps**
**Model: GSP 90-18**

| Weight (lb) | | |
|---|---|---|
| Pump | Motor | Pump + Motor |
| 65.1 | 130 | 195.1 |

| Cable | |
|---|---|
| Length (Ft) | AWG |
| 13.1 | 10 |

## Dimensions:

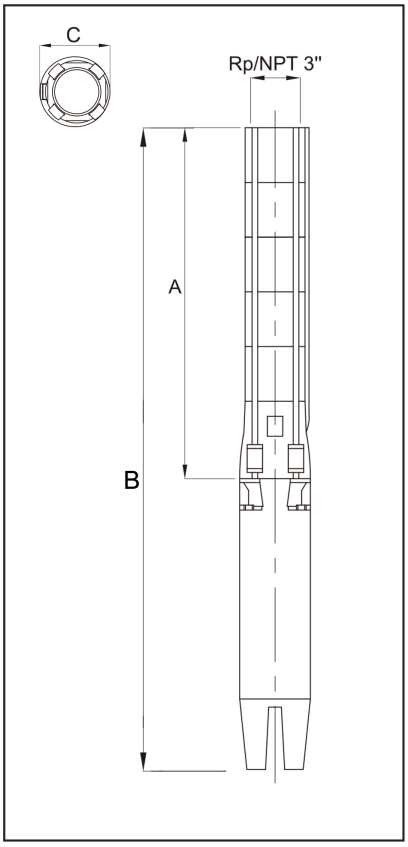


| Outlet | Motor Dia. | Dimensions (inch) | | |
|---|---|---|---|---|
| | | A | B | C |
| NPT 3" | 6" | 54" | 84.7" | 5.6" |

| Project | Project ID | Created by | Created on | Last update |
|---|---|---|---|---|
| | | | | |

# Performance Curves

## Submersible Pump - GSP 90-18

| Revision no. | Page: |
|---|---|
| | 2 |

| | Receiver | From |
|---|---|---|
| Company name | | |
| Respons. Department | | |
| Person in charge | | |
| Phone number | | |
| Fax no | | |
| E-mail address | | |

| Pump Model | Motor | | Q Capacity 3450RPM | | | | | | | | |
|---|---|---|---|---|---|---|---|---|---|---|---|
| | P2 | | G/Min | 26.4 | 39.6 | 52.8 | 66 | 79.3 | 92.5 | 105.7 | 118.9 |
| | kW | HP | Head in Feet | 928.5 | 908.8 | 872.7 | 820.2 | 754.6 | 672.6 | 577.4 | 459.3 |
| GSP 90-18 | 15 | 20 | | | | | | | | | |

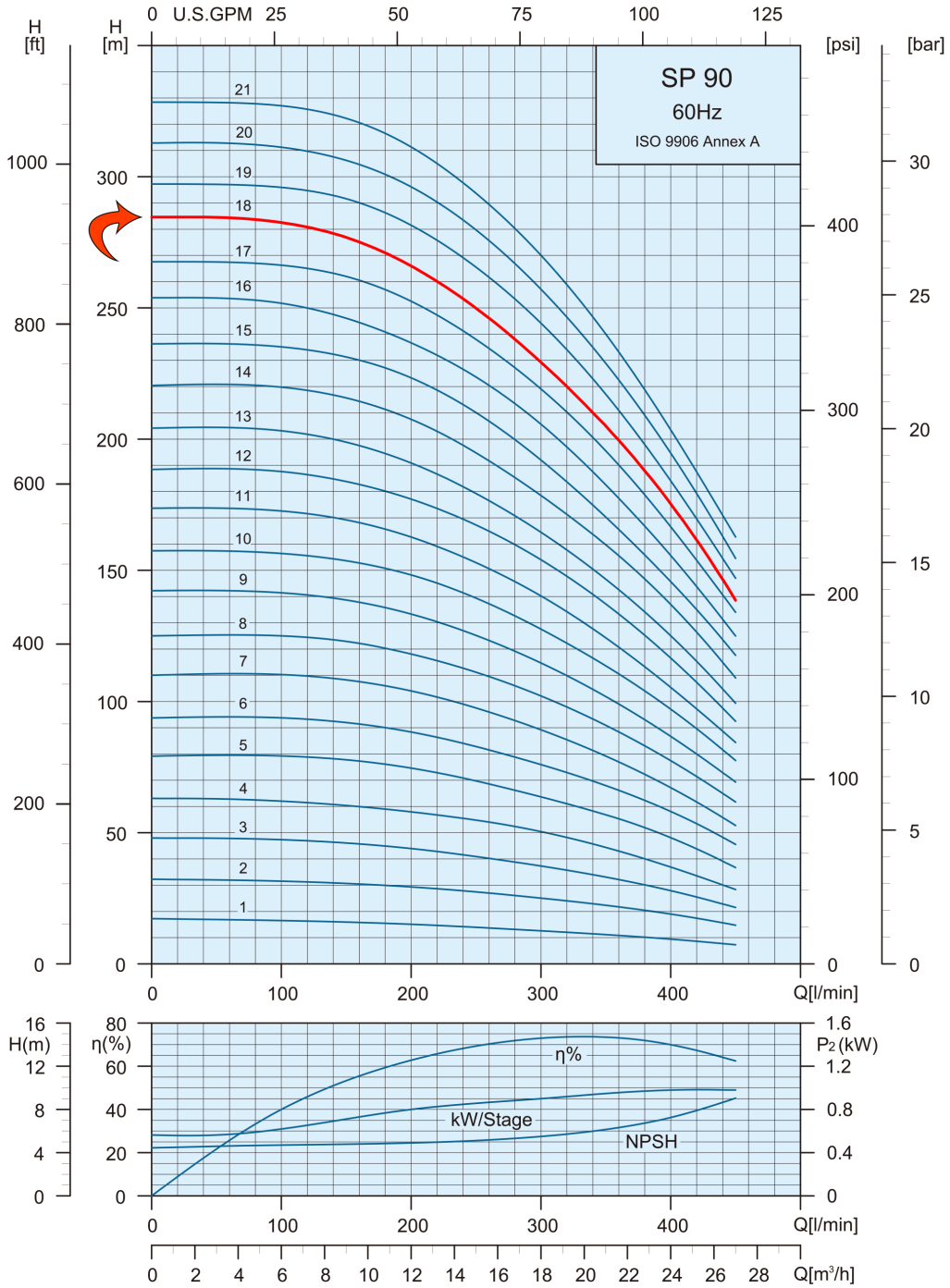


| Project | Project ID | Created by | Created on | Last update |
|---|---|---|---|---|
| | | | | |

# Part List and Materials

## Submersible Pump - GSP 90-18

Revision no.

Page: 3

| | Receiver | From |
|---|---|---|
| Company name | | |
| Respons. Department | | |
| Person in charge | | |
| Phone number | | |
| Fax no | | |
| E-mail address | | |

| Motor Model | P2 | | S.F | Voltage | Phase | In | Imax | Istart | PF (%) | | Efficiency (%) | | RPM | Thrust |
|---|---|---|---|---|---|---|---|---|---|---|---|---|---|---|
| | kW | HP | | V | PH | A | A | A | Allowable Load | Overload Factor | Allowable Load | Overload Factor | | N |
| 6CN7346D | 15 | 20 | 1.15 | 460 | Three | 28.6 | 31.7 | 152 | 0.8 | 0.83 | 82 | 82.1 | 3450 | 15500 |

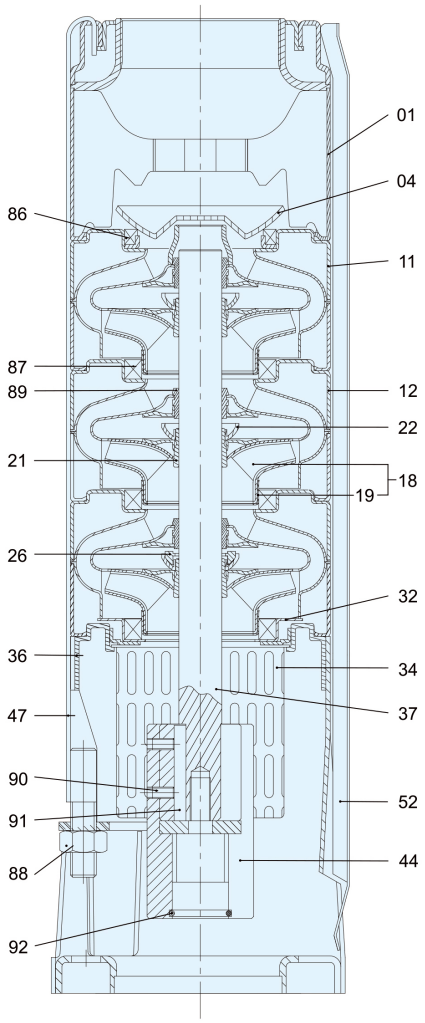


| Pos. | Part Name | Materials |
|---|---|---|
| 01 | Discharge | AISI 316 |
| 04 | Valve Cone | AISI 316 |
| 11 | Top Diffuser | AISI 316 |
| 12 | Diffuser | AISI 316 |
| 18 | Impeller | AISI 316 |
| 19 | Ring of Impeller | AISI 316 |
| 21 | Split Cone | AISI 316 |
| 22 | Split Cone Nut | AISI 316 |
| 26 | Spacing Washer for Stop Ring | Carbon + Graphite + PTFE |
| 32 | Neck Ring Retainer | AISI 316 |
| 34 | Strainer | AISI 316 |
| 36 | Suction Interconnector | AISI 316 |
| 37 | Pump Shaft | AISI 316 |
| 44 | Coupling | AISI 316 |
| 47 | Strap | AISI 316 |
| 52 | Cable Guard | AISI 316 |
| 86 | Valve Seat | AISI 316 + HNBR |
| 87 | Neck Ring Nut | AISI 316 + HNBR |
| 88 | Nut | AISI 316 |
| 89 | Bearing | HNBR |
| 90 | Screw | AISI 316 |
| 91 | Key | AISI 316 |
| 92 | O-ring | HNBR |

| Project | Project ID | Created by | Created on | Last update |
|---|---|---|---|---|
| | | | | |