	Technical Data Submersible Pump - GSP 800-3	Revision no.	Page: 1

	Receiver	From
Company name		
Respons. Department		
Person in charge		
Phone number		
Fax no		
E-mail address		

Brand: Gol Pumps
Model: GSP 800-3

Weight (lb)		
Pump	Motor	Pump + Motor
98.1	426.8	524.9

Cable	
Length (Ft)	(mm^2)
11.5	(1x16)x3

Dimensions:

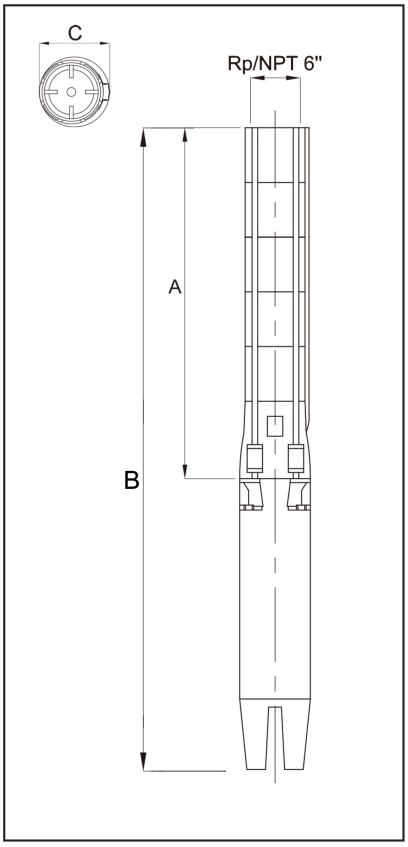

Outlet	Motor Dia.	Dimensions (inch)		
		A	B	C
NPT 6"	8"	37.9"	91"	8.4"

Project	Project ID	Created by	Created on	Last update

Performance Curves

Submersible Pump - GSP 800-3

Revision no.	Page:
	2

Receiver	From
Company name	
Respons. Department	
Person in charge	
Phone number	
Fax no	
E-mail address	

Pump Model	Motor		Q Capacity 3450RPM												
	P2		G/Min	158.5	237.8	317	396.3	475.5	554.8	634	713.3	792.5	871.8	951	1030
	kW	HP	Head in Feet	459.3	446.2	426.5	403.5	377.3	354.3	337.9	321.5	305.1	285.4	259.2	223.1
GSP 800-3	55	75													

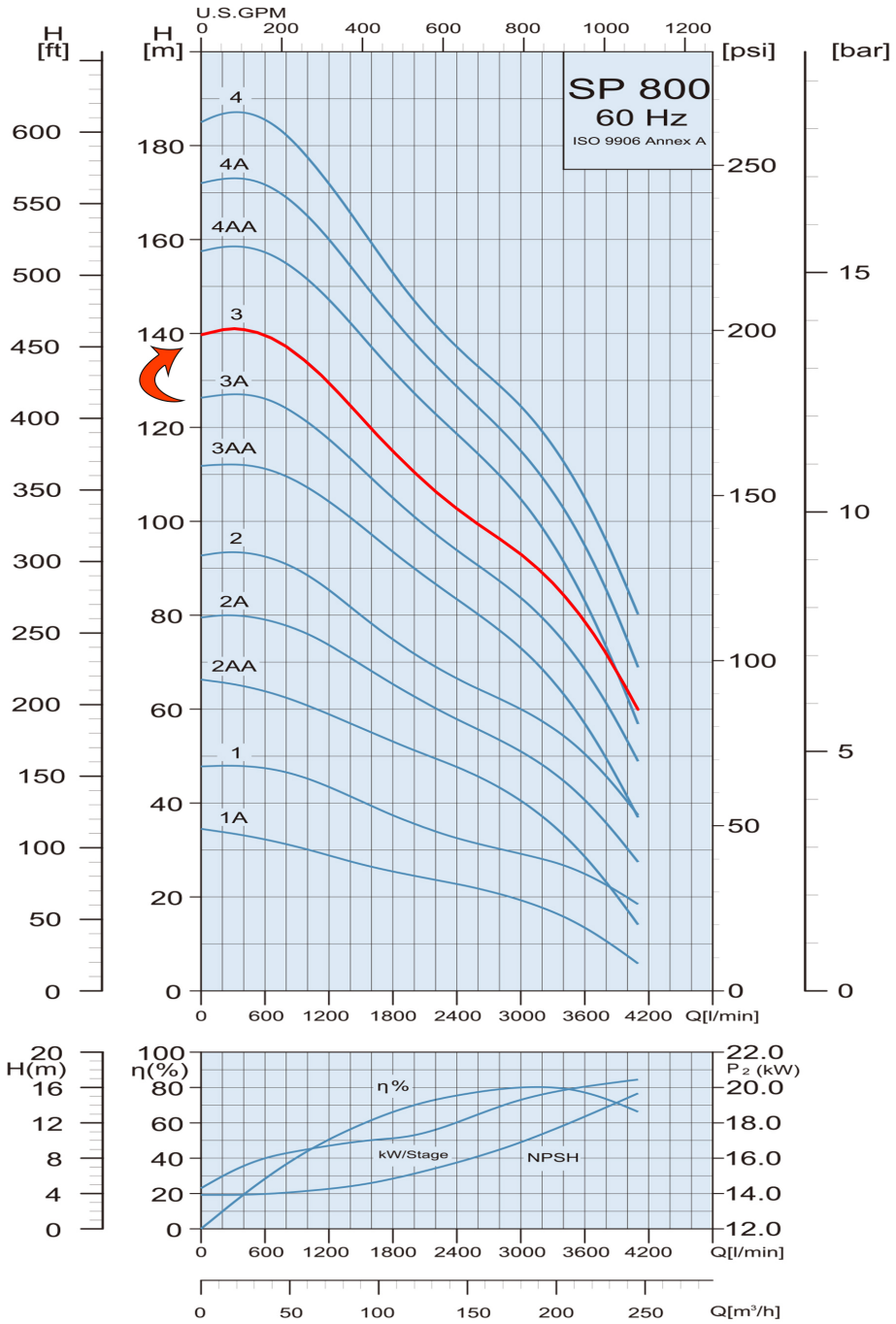

Project	Project ID	Created by	Created on	Last update

Part List and Materials

Submersible Pump - GSP 800-3

Revision no.	Page:
	3

	Receiver	From
Company name		
Respons. Department		
Person in charge		
Phone number		
Fax no		
E-mail address		

Motor Model	P_{MAX}		Voltage	Phase	I_N	I_A	η (Eff.) %			cosϕ (PF)			RPM	Thrust
	kW	HP	V	PH	A	A	2/4	3/4	4/4	2/4	3/4	4/4		N
8F75	55	75	460	Three	94	376	85.9	88.1	86.7	0.74	0.82	0.85	3490	60000

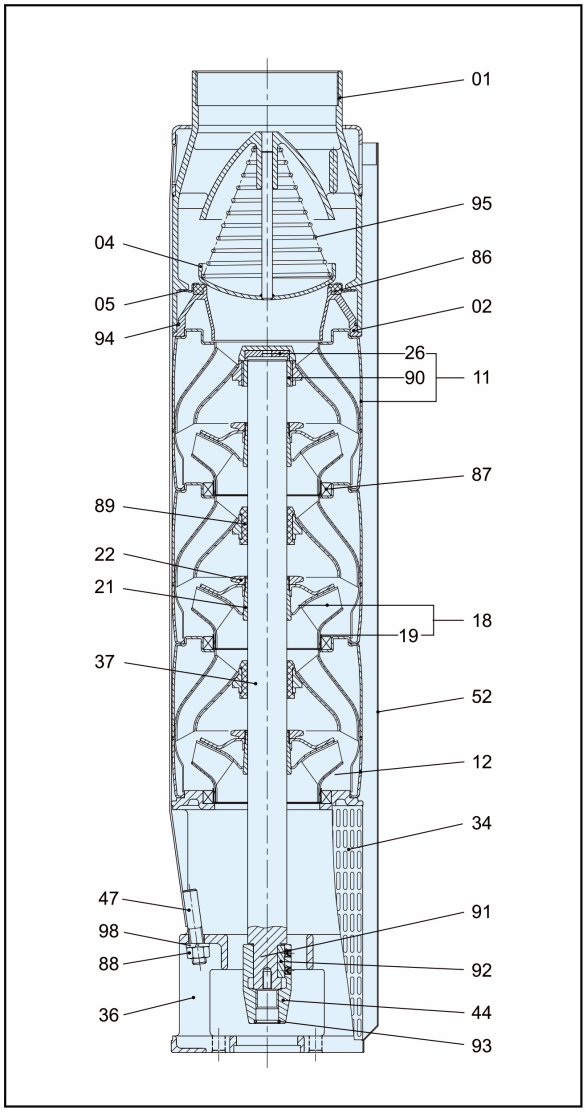

Pos.	Part Name	Materials
01	Discharge	AISI 316
02	Lower Valve Seat Retainer	AISI 316
04	Valve Cup	AISI 316
05	Upper Valve Seat Retainer	AISI 316
11	Upper Diffuser	AISI 316
+26	Spacing Washer for Stop Ring	Carbon Fiber + MoS2 + PTFE
+90	Upper Bearing	AISI 316 + HNBR
12	Diffuser	AISI 316
18	Impeller	AISI 316
18	Impeller-A	AISI 316
+19	Ring Of Impeller	AISI 316
21	Split Cone	AISI 316
22	Split Cone Nut	AISI 316
34	Strainer-one lead	AISI 316
34	Strainer-two leads	AISI 316
36	Suction Interconnector - 6"	AISI 316
36	Suction Interconnector - 8"	AISI 316
37	Shaft	AISI 316
44	Coupling - 6"	AISI 316
44	Coupling - 8"	AISI 316
47	Strap	AISI 316
52	Cable Guard	AISI 316
86	Valve Seat	HNBR70
87	Neck Ring	HNBR
88	Nut	AISI 316
89	Bearing	HNBR70
91	Screw - 6"	AISI 316
91	Screw - 8"	AISI 316
92	Key - 6"	AISI 316
92	Key - 8"	AISI 316
93	O-ring - 6"	HNBR70
93	O-ring - 8"	HNBR70
94	O-ring	HNBR70
95	Spring	AISI 316
98	Spring Washer	AISI 316

Project	Project ID	Created by	Created on	Last update