	Technical Data Submersible Pump - GSP 70-8	Revision no.	Page: 1

	Receiver	From
Company name		
Respons. Department		
Person in charge		
Phone number		
Fax no		
E-mail address		

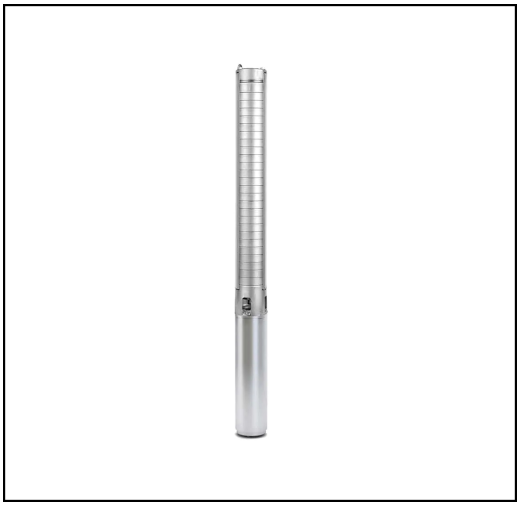

Brand: Gol Pumps
Model: GSP 70-8

Weight (lb)		
Pump	Motor	Pump + Motor
15.4	55	70.4

Cable	
Length (Ft)	AWG
8.2	14

Dimensions:

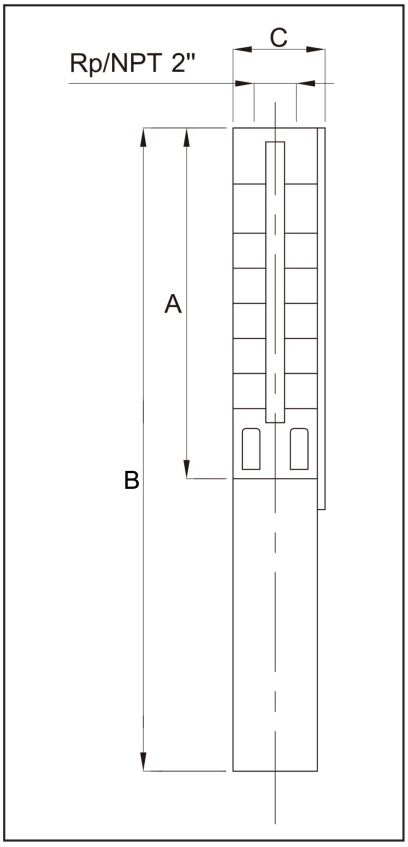

Outlet	Motor Dia.	Dimensions (inch)		
		A	B	C
NPT 2"	4"	27.6"	49.3"	3.9"

Project	Project ID	Created by	Created on	Last update

Performance Curves

Submersible Pump - GSP 70-8

Revision no.	Page:
	2

	Receiver	From
Company name		
Respons. Department		
Person in charge		
Phone number		
Fax no		
E-mail address		

Pump Model	Motor		Q Capacity 3450RPM								
	P2		G/Min	0	37	42.3	47.6	52.8	66	79.3	92.5
	kW	HP	Head in Feet	249.3	236.2	229.7	226.4	219.8	200.1	173.9	134.5
GSP 70-8	3.7	5									

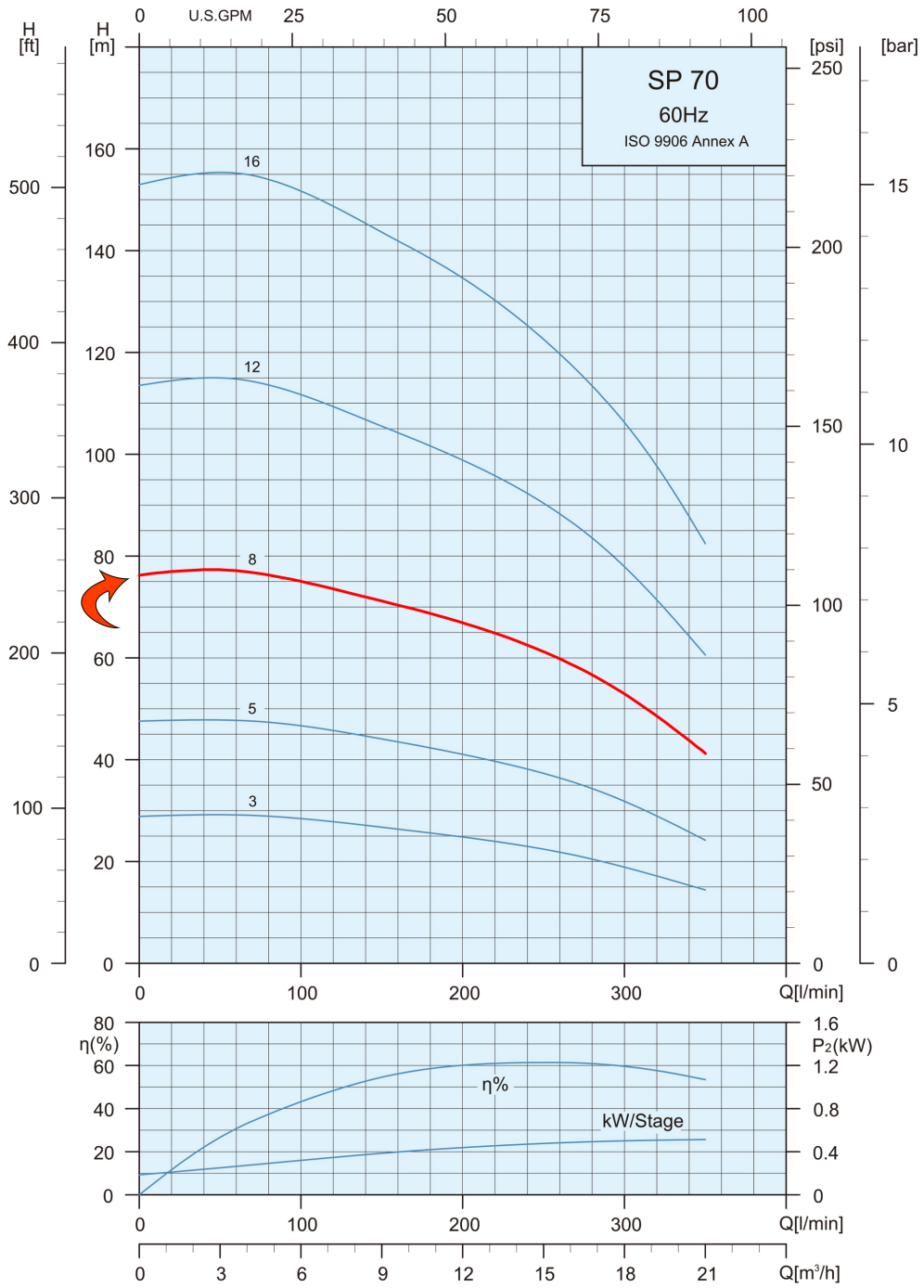

Project	Project ID	Created by	Created on	Last update

Part List and Materials

Submersible Pump - GSP 70-8

Revision no.

	Receiver	From
Company name		
Respons. Department		
Person in charge		
Phone number		
Fax no		
E-mail address		

Motor Model	P2		S.F	Voltage	Phase	In	Imax	Istart	PF (%)		Efficiency (%)		RPM	Thrust
	kW	HP		V	PH	A	A	A	Allowable Load	Overload Factor	Allowable Load	Overload Factor		N
4CN6376	3.7	5	1.15	460	Three	8.7	9.5	68.4	0.68	0.72	77.4	77.9	3450	6000

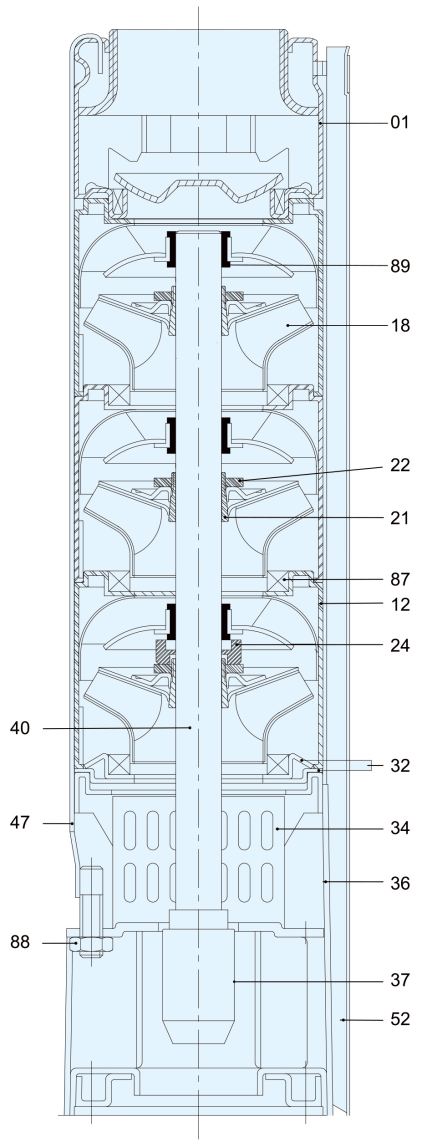

Pos.	Part Name	Materials
01	Discharge	AISI 316
12	Diffuser	AISI 316
18	Impeller	AISI 316
21	Split Cone	AISI 316
22	Split Cone Nut	AISI 316
24	Stop Ring	Carbon + Graphite + PTFE
32	Neck Ring Retainer	AISI 316
34	Strainer	AISI 316
36	Suction Interconnector	AISI 316
37	Coupling	AISI 316
40	Pump Shaft	AISI 316
47	Strap	AISI 316
52	Cable Guard	AISI 316
87	Neck Ring	AISI 316 + HNBR
88	Nut	AISI 316
89	Bearing	HNBR

Project	Project ID	Created by	Created on	Last update