	Technical Data Submersible Pump - GSP 650-7	Revision no.	Page: 1

	Receiver	From
Company name		
Respons. Department		
Person in charge		
Phone number		
Fax no		
E-mail address		

Brand: Gol Pumps
Model: GSP 650-7

Weight (lb)		
Pump	Motor	Pump + Motor
155.4	787.6	943

Cable	
Length (Ft)	(mm^2)
14.8	(1x35)x3

Dimensions:

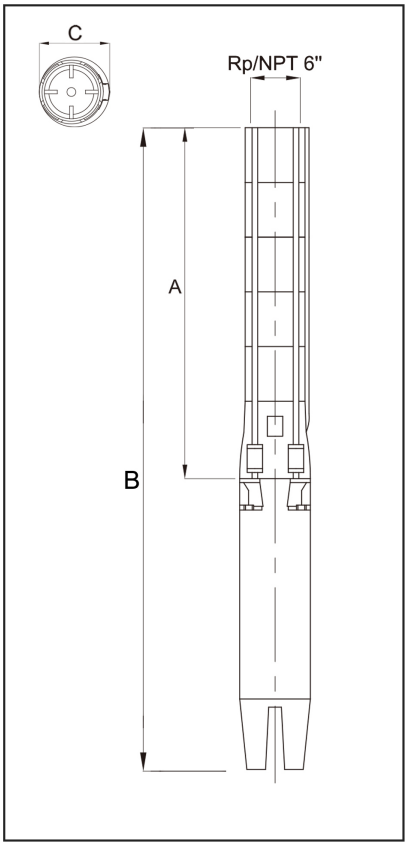

Outlet	Motor Dia.	Dimensions (inch)		
		A	B	C
NPT 6"	8"	62.4"	133.7"	8.4"

Project	Project ID	Created by	Created on	Last update

Performance Curves
Submersible Pump - GSP 650-7

Revision no.	Page:
	2

	Receiver	From
Company name		
Respons. Department		
Person in charge		
Phone number		
Fax no		
E-mail address		

Pump Model	Motor		Q Capacity 3450RPM												
	P2		G/Min	211.3	264.2	317	369.8	422.7	475.5	528.3	581.2	634	686.8	739.7	792.5
	kW	HP	Head in Feet	944.9	921.9	895.7	862.9	836.6	807.1	774.3	741.5	705.4	659.4	607	544.6
GSP 650-7	110	150													

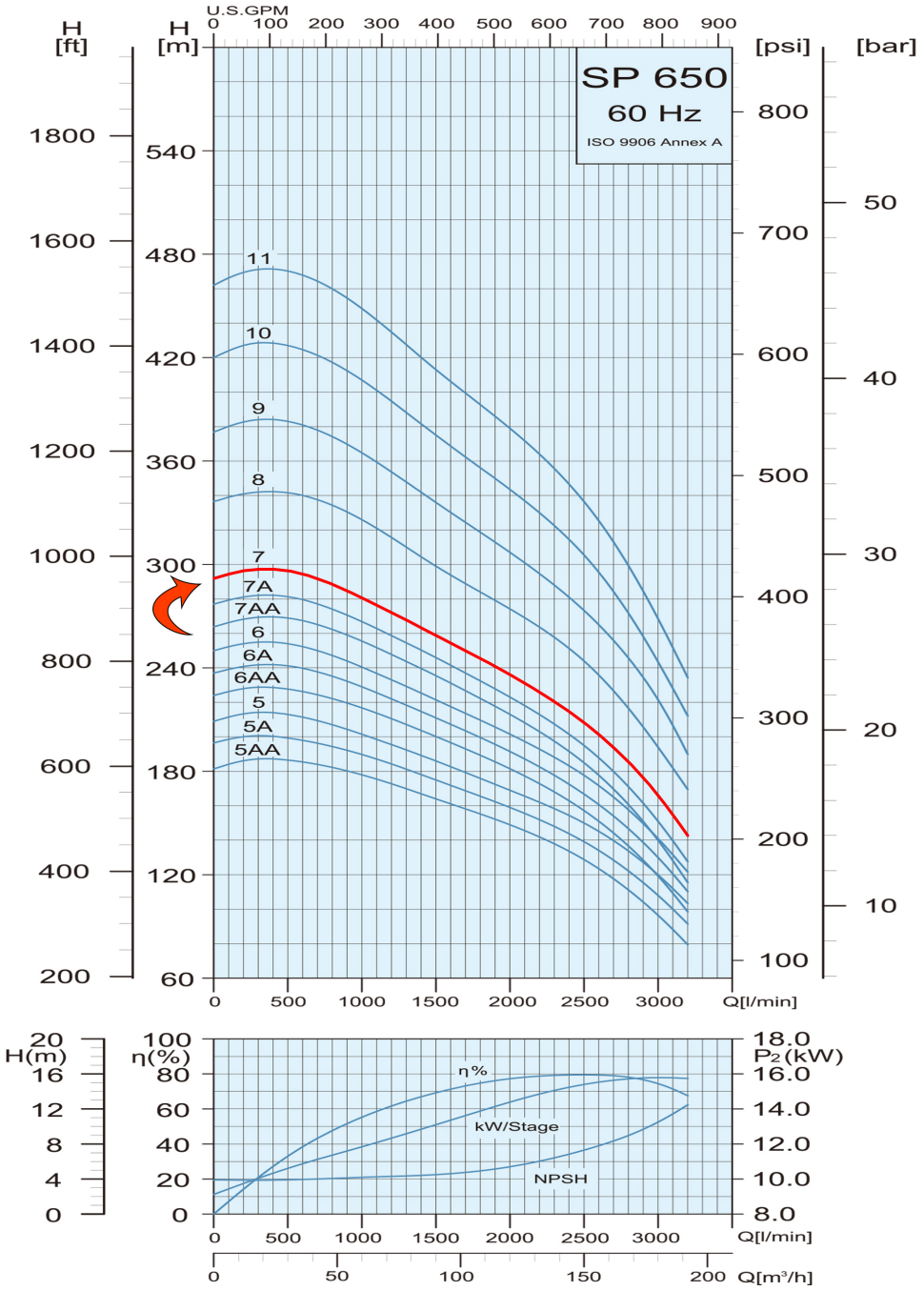

Project	Project ID	Created by	Created on	Last update

Part List and Materials

Submersible Pump - GSP 650-7

Revision no.	Page:
	3

	Receiver	From
Company name		
Respons. Department		
Person in charge		
Phone number		
Fax no		
E-mail address		

Motor Model	P_{MAX}		Voltage	Phase	I_N	I_A	η (Eff.) %			cosϕ (PF)			RPM	Thrust
	kW	HP	V	PH	A	A	2/4	3/4	4/4	2/4	3/4	4/4		N
10F150	110	150	460	Three	189	851	86.5	87.6	87.1	0.76	0.82	0.84	3507	80000

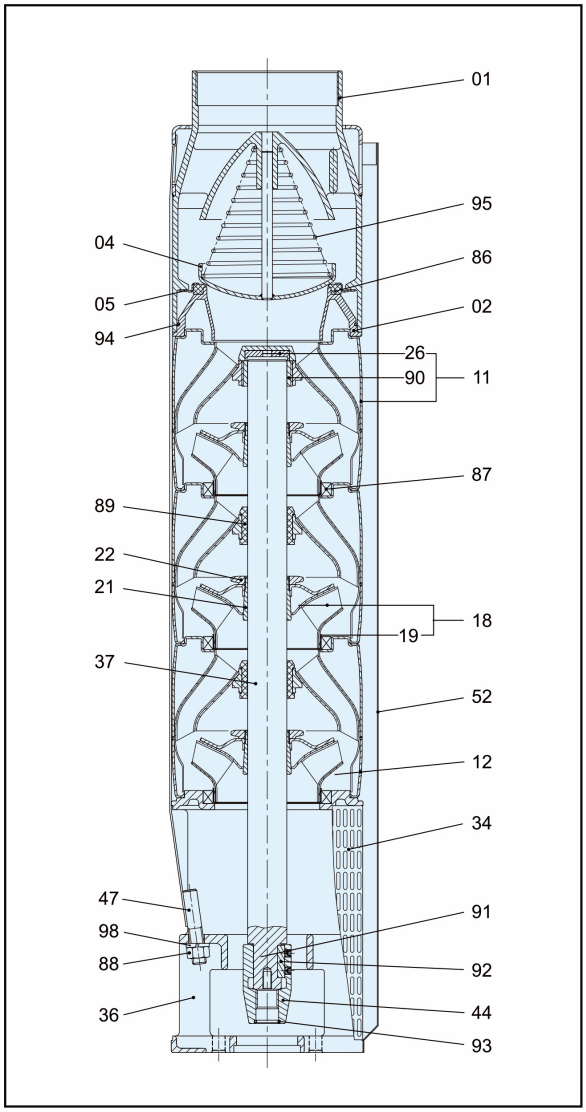

Pos.	Part Name	Materials
01	Discharge	AISI 316
02	Lower Valve Seat Retainer	AISI 316
04	Valve Cup	AISI 316
05	Upper Valve Seat Retainer	AISI 316
11	Upper Diffuser	AISI 316
+26	Spacing Washer for Stop Ring	Carbon Fiber + MoS2 + PTFE
+90	Upper Bearing	AISI 316 + HNBR
12	Diffuser	AISI 316
18	Impeller	AISI 316
18	Impeller-A	AISI 316
+19	Ring Of Impeller	AISI 316
21	Split Cone	AISI 316
22	Split Cone Nut	AISI 316
34	Strainer-one lead	AISI 316
34	Strainer-two leads	AISI 316
36	Suction Interconnector - 6"	AISI 316
36	Suction Interconnector - 8"	AISI 316
37	Shaft	AISI 316
44	Coupling - 6"	AISI 316
44	Coupling - 8"	AISI 316
47	Strap	AISI 316
52	Cable Guard	AISI 316
86	Valve Seat	HNBR70
87	Neck Ring	HNBR
88	Nut	AISI 316
89	Bearing	HNBR70
91	Screw - 6"	AISI 316
91	Screw - 8"	AISI 316
92	Key - 6"	AISI 316
92	Key - 8"	AISI 316
93	O-ring - 6"	HNBR70
93	O-ring - 8"	HNBR70
94	O-ring	HNBR70
95	Spring	AISI 316
98	Spring Washer	AISI 316

Project	Project ID	Created by	Created on	Last update