| | Technical Data<br>Submersible Pump - GSP 400-9 | Revision no. | Page:<br>1 |
|---|---|---|---|

| | Receiver | From |
|---|---|---|
| Company name | | |
| Respons. Department | | |
| Person in charge | | |
| Phone number | | |
| Fax no | | |
| E-mail address | | |

**Brand: Gol Pumps**
**Model: GSP 400-9**

| Weight (lb) | | |
|---|---|---|
| Pump | Motor | Pump + Motor |
| 121.4 | 426.8 | 548.2 |

| Cable | |
|---|---|
| Length (Ft) | ($mm^2$) |
| 11.5 | (1x16)x3 |

## Dimensions:

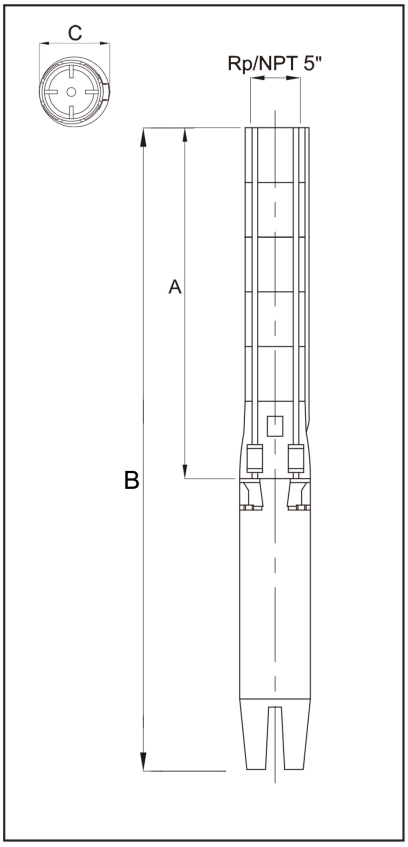


| Outlet | Motor Dia. | Dimensions (inch) | | |
|---|---|---|---|---|
| | | A | B | C |
| NPT 5" | 8" | 65.2" | 118.3" | 7.9" |

| Project | Project ID | Created by | Created on | Last update |
|---|---|---|---|---|
| | | | | |

# Performance Curves

## Submersible Pump - GSP 400-9

| Revision no. | Page: |
|---|---|
| | 2 |

| | Receiver | From |
|---|---|---|
| Company name | | |
| Respons. Department | | |
| Person in charge | | |
| Phone number | | |
| Fax no | | |
| E-mail address | | |

| Pump Model | Motor | | Q Capacity 3450RPM | | | | | | | | | | | | |
|---|---|---|---|---|---|---|---|---|---|---|---|---|---|---|---|
| | P2 | | G/Min | 79.3 | 105.7 | 132.1 | 158.5 | 184.9 | 211.3 | 264.2 | 317 | 369.8 | 422.7 | 475.5 | 528.3 |
| | kW | HP | Head in Feet | 859.6 | 849.7 | 833.3 | 810.4 | 780.8 | 751.3 | 689 | 639.8 | 587.3 | 524.9 | 452.8 | 360.9 |
| GSP 400-9 | 55 | 75 | | | | | | | | | | | | | |

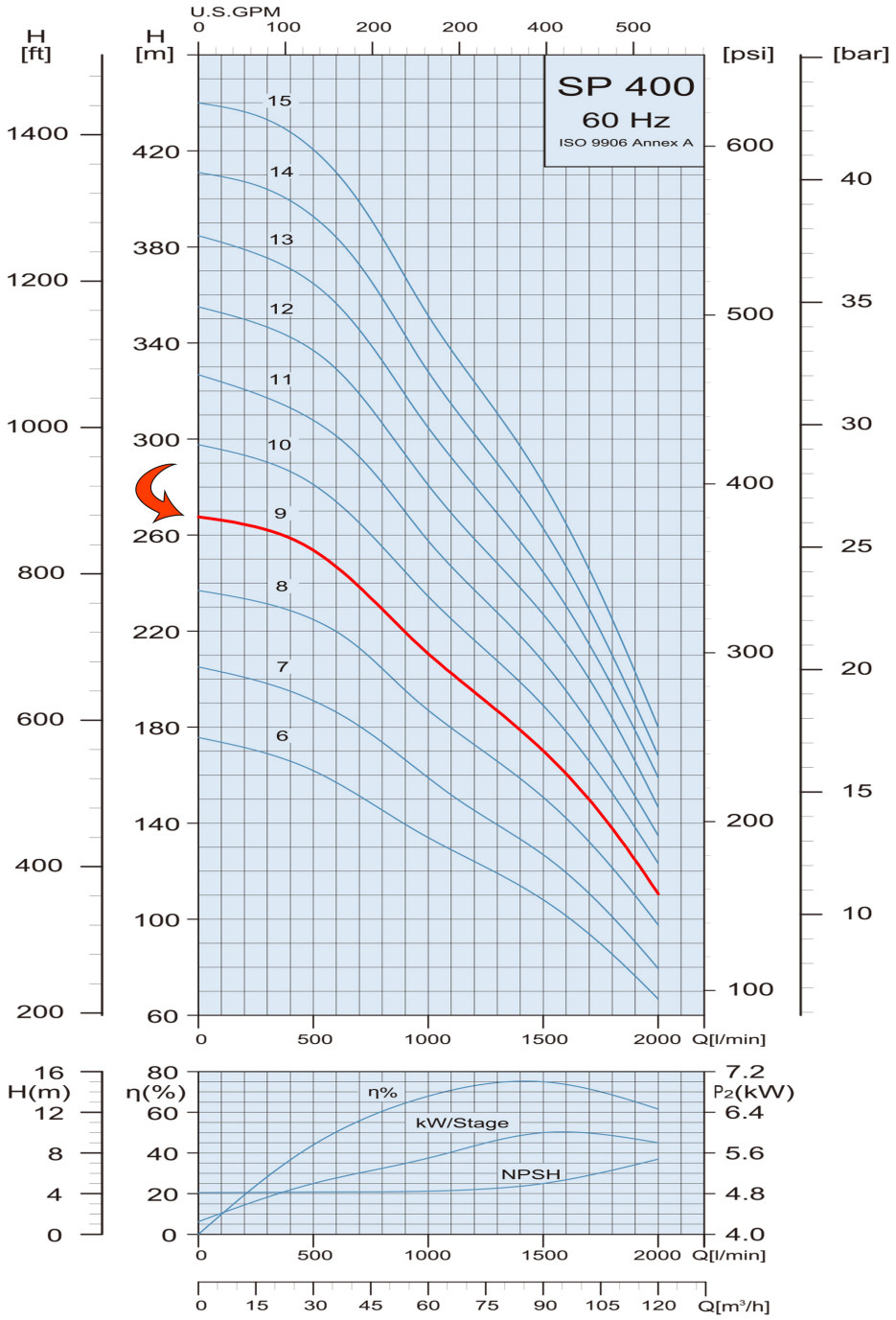


| Project | Project ID | Created by | Created on | Last update |
|---|---|---|---|---|
| | | | | |

# Part List and Materials

## Submersible Pump - GSP 400-9

Revision no.

Page: 3

| | Receiver | From |
|---|---|---|
| Company name | | |
| Respons. Department | | |
| Person in charge | | |
| Phone number | | |
| Fax no | | |
| E-mail address | | |

| Motor Model | $P_{MAX}$ | | Voltage | Phase | $I_N$ | $I_A$ | η (Eff.) % | | | cosϕ (PF) | | | RPM | Thrust |
|---|---|---|---|---|---|---|---|---|---|---|---|---|---|---|
| | kW | HP | V | PH | A | A | 2/4 | 3/4 | 4/4 | 2/4 | 3/4 | 4/4 | | N |
| **8F75** | 55 | 75 | 460 | Three | 94 | 376 | 85.9 | 88.1 | 86.7 | 0.74 | 0.82 | 0.85 | 3490 | 60000 |

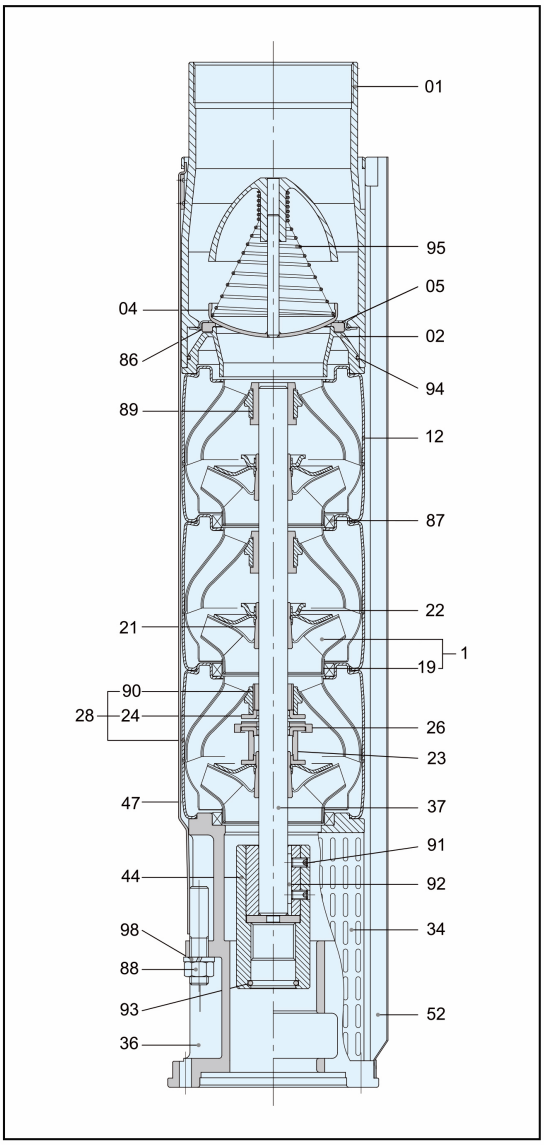


| Pos. | Part Name | Materials |
|---|---|---|
| 01 | Discharge | AISI 316 |
| 02 | Lower Valve Seat Retainer | AISI 316 |
| 04 | Valve Cup | AISI 316 |
| 05 | Upper Valve Seat Retainer | AISI 316 |
| 12 | Diffuser | AISI 316 |
| 18 | Impeller | AISI 316 |
| 19 | Ring Of impeller | AISI 316 |
| 21 | Split Cone | AISI 316 |
| 22 | Split Cone Nut | AISI 316 |
| 23 | Nut For Stop Ring | AISI 316 |
| 24 | Stop Ring | AISI 316 |
| 26 | Spacing Washer for Stop Ring | Carbon + Graphite + PTFE |
| 28 | Bottom Diffuser | AISI 316 |
| 34 | Strainer | AISI 316 |
| 36 | Suction Interconnector | AISI 316 |
| 37 | Pump Shaft | AISI 316 |
| 44 | Coupling | AISI 316 |
| 47 | Strap | AISI 316 |
| 52 | Cable Guard | AISI 316 |
| 86 | Valve Seat | HNBR |
| 87 | Neck Ring | AISI 316 + HNBR |
| 88 | Nut | AISI 316 |
| 89 | Bearing | HNBR |
| 90 | Bearing | AISI 316 + HNBR |
| 91 | Screw | AISI 316 |
| 92 | Key | AISI 316 |
| 93 | O-ring | HNBR |
| 94 | O-ring | HNBR |
| 95 | Spring | AISI 316 |
| 98 | Spring Washer | AISI 316 |

| Project | Project ID | Created by | Created on | Last update |
|---|---|---|---|---|
| | | | | |