	Technical Data Submersible Pump - GSP 400-7	Revision no.	Page: 1

	Receiver	From
Company name		
Respons. Department		
Person in charge		
Phone number		
Fax no		
E-mail address		

Brand: Gol Pumps
Model: GSP 400-7

Weight (lb)		
Pump	Motor	Pump + Motor
102.5	236.5	339

Cable	
Length (Ft)	AWG
13.1	8

Dimensions:

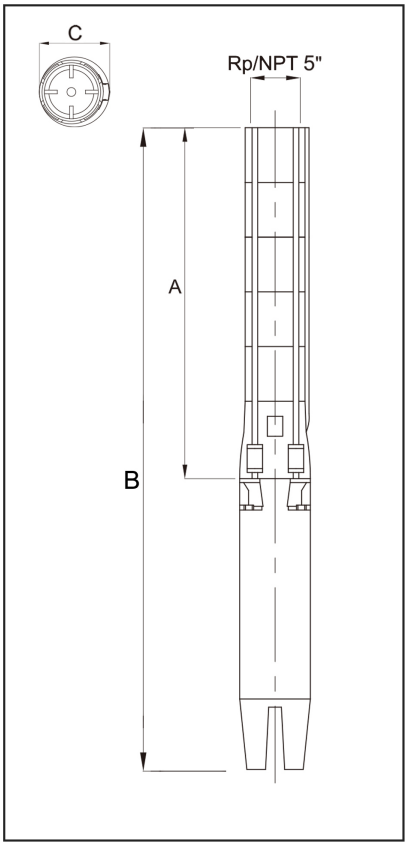

Outlet	Motor Dia.	Dimensions (inch)		
		A	B	C
NPT 5"	6"	54.6"	104.2"	7"

Project	Project ID	Created by	Created on	Last update

Performance Curves

Submersible Pump - GSP 400-7

Revision no.	Page:
	2

	Receiver	From
Company name		
Respons. Department		
Person in charge		
Phone number		
Fax no		
E-mail address		

Pump Model	Motor		Q Capacity 3450RPM												
	P2		G/Min	79.3	105.7	132.1	158.5	184.9	211.3	264.2	317	369.8	422.7	475.5	528.3
	kW	HP	Head in Feet	649.6	639.8	626.6	610.2	590.6	570.9	521.7	479	436.4	393.7	331.4	262.5
GSP 400-7	37	50													

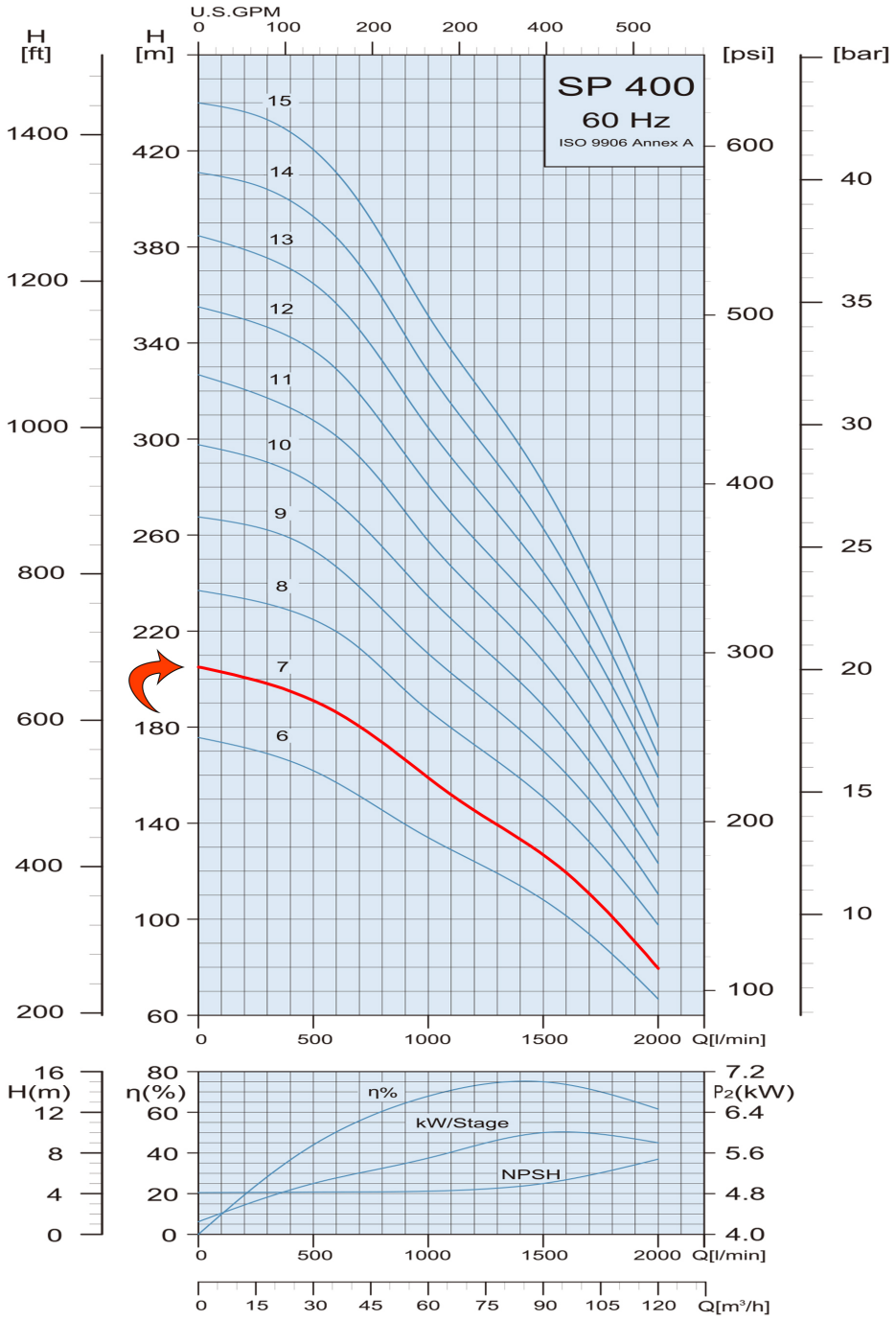

Project	Project ID	Created by	Created on	Last update

Part List and Materials

Submersible Pump - GSP 400-7

Revision no.	Page:
	3

	Receiver	From
Company name		
Respons. Department		
Person in charge		
Phone number		
Fax no		
E-mail address		

Motor Model	P2		S.F	Voltage	Phase	In	Imax	Istart	PF (%)		Efficiency (%)		RPM	Thrust
	kW	HP		V	PH	A	A	A	Allowable Load	Overload Factor	Allowable Load	Overload Factor		N
6CN8386D	37	50	1.15	460	Three	65.9	77.6	382.3	0.84	0.84	84	83.8	3450	27500

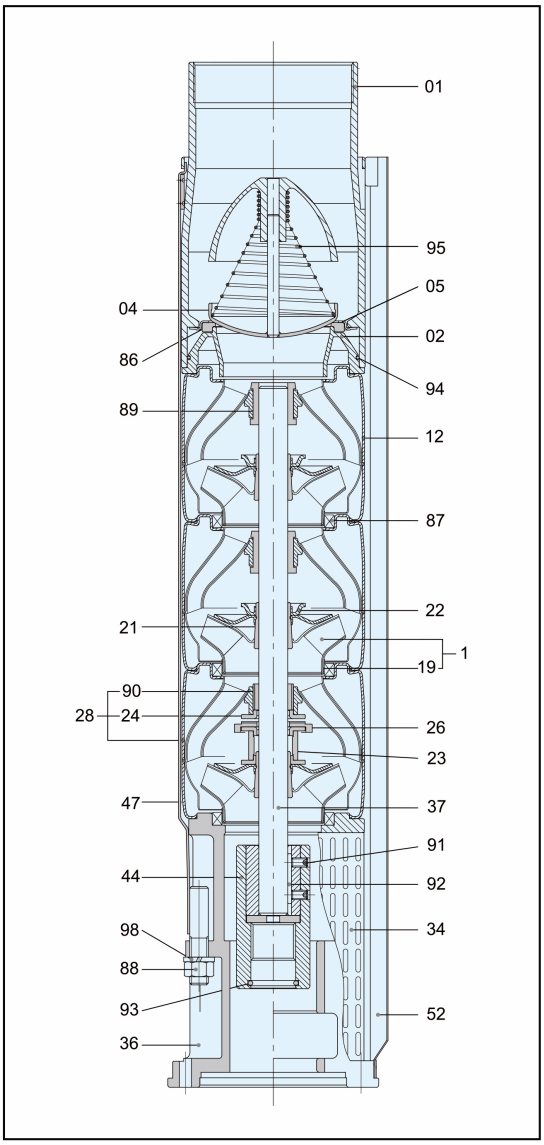

Pos.	Part Name	Materials
01	Discharge	AISI 316
02	Lower Valve Seat Retainer	AISI 316
04	Valve Cup	AISI 316
05	Upper Valve Seat Retainer	AISI 316
12	Diffuser	AISI 316
18	Impeller	AISI 316
19	Ring Of impeller	AISI 316
21	Split Cone	AISI 316
22	Split Cone Nut	AISI 316
23	Nut For Stop Ring	AISI 316
24	Stop Ring	AISI 316
26	Spacing Washer for Stop Ring	Carbon + Graphite + PTFE
28	Bottom Diffuser	AISI 316
34	Strainer	AISI 316
36	Suction Interconnector	AISI 316
37	Pump Shaft	AISI 316
44	Coupling	AISI 316
47	Strap	AISI 316
52	Cable Guard	AISI 316
86	Valve Seat	HNBR
87	Neck Ring	AISI 316 + HNBR
88	Nut	AISI 316
89	Bearing	HNBR
90	Bearing	AISI 316 + HNBR
91	Screw	AISI 316
92	Key	AISI 316
93	O-ring	HNBR
94	O-ring	HNBR
95	Spring	AISI 316
98	Spring Washer	AISI 316

Project	Project ID	Created by	Created on	Last update