	Technical Data Submersible Pump - GSP 300-3	Revision no.	Page: 1

	Receiver	From
Company name		
Respons. Department		
Person in charge		
Phone number		
Fax no		
E-mail address		

Brand: Gol Pumps
Model: GSP 300-3

Weight (lb)		
Pump	Motor	Pump + Motor
25.3	112.9	138.2

Cable	
Length (Ft)	AWG
13.1	10

Dimensions:

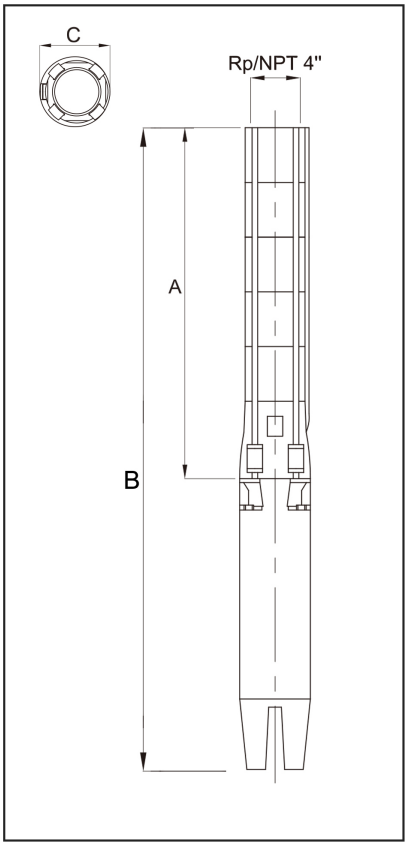

Outlet	Motor Dia.	Dimensions (inch)		
		A	B	C
NPT 4"	6"	24"	52.3"	5.9"

Project	Project ID	Created by	Created on	Last update

Performance Curves

Submersible Pump - GSP 300-3

Revision no.	Page:
	2

	Receiver	From
Company name		
Respons. Department		
Person in charge		
Phone number		
Fax no		
E-mail address		

Pump Model	Motor		Q Capacity 3450RPM												
	P2		G/Min	105.7	118.9	132.1	158.5	184.9	211.3	237.8	264.2	290.6	317	343.4	369.8	396.3
	kW	HP	Head in Feet	193.6	190.3	187	173.9	160.8	150.9	137.8	124.7	118.1	108.3	95.1	82	65.6
GSP 300-3	11	15														

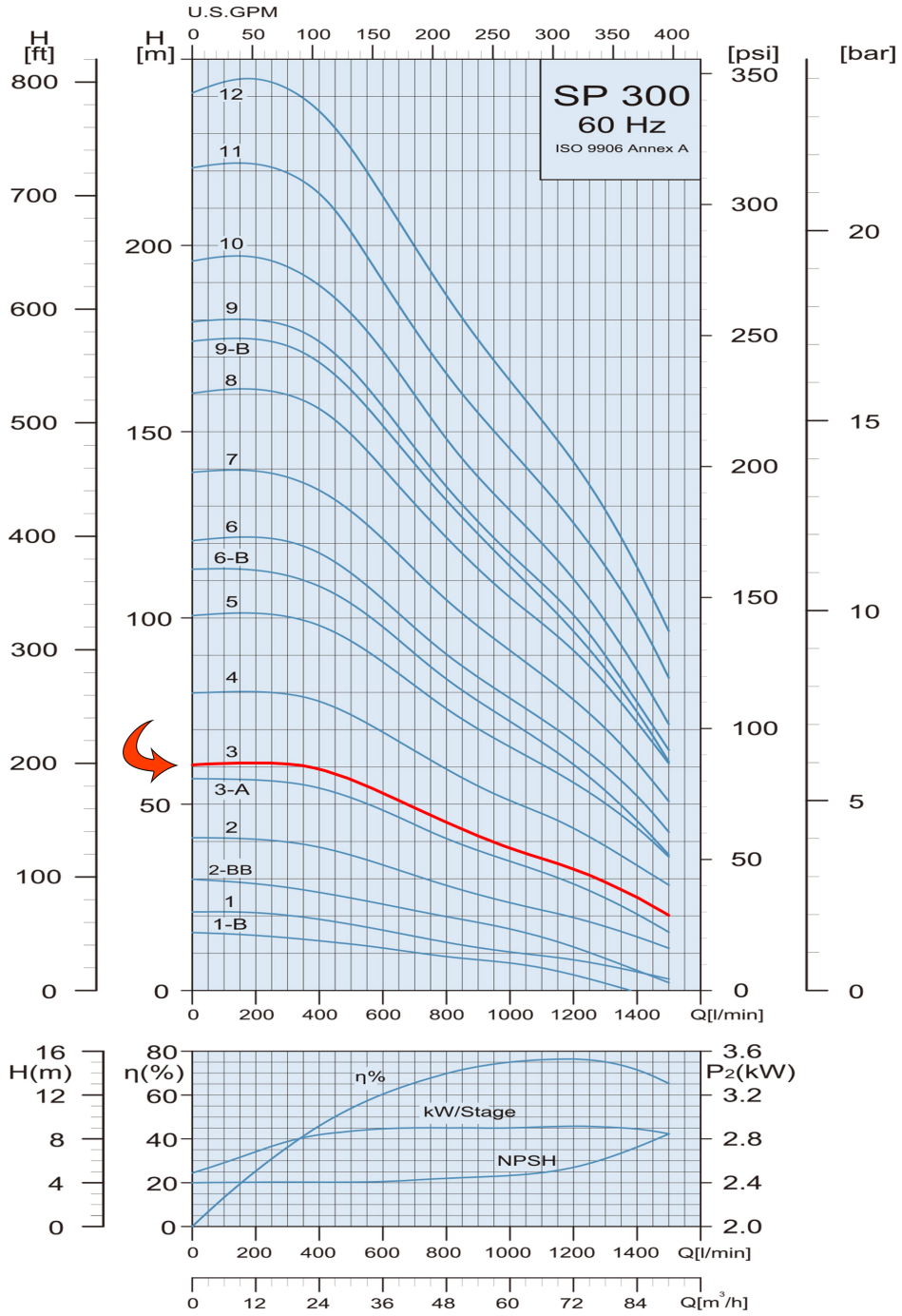

Project	Project ID	Created by	Created on	Last update

Part List and Materials

Submersible Pump - GSP 300-3

Revision no.

Page: 3

Receiver	From
Company name	
Respons. Department	
Person in charge	
Phone number	
Fax no	
E-mail address	

Motor Model	P2		S.F	Voltage	Phase	In	Imax	Istart	PF (%)		Efficiency (%)		RPM	Thrust
	kW	HP		V	PH	A	A	A	Allowable Load	Overload Factor	Allowable Load	Overload Factor		N
6CN7136D	11	15	1.15	230	Three	40.2	46.1	156	0.85	0.86	79.3	77.7	3450	15500

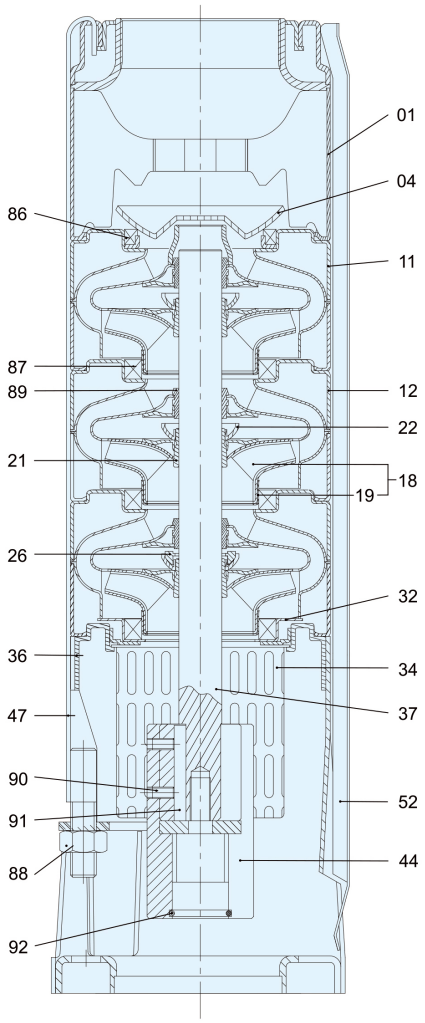

Pos.	Part Name	Materials
01	Discharge	AISI 316
04	Valve Cone	AISI 316
11	Top Diffuser	AISI 316
12	Diffuser	AISI 316
18	Impeller	AISI 316
19	Ring of Impeller	AISI 316
21	Split Cone	AISI 316
22	Split Cone Nut	AISI 316
26	Spacing Washer for Stop Ring	Carbon + Graphite + PTFE
23	Neck Ring Retainer	AISI 316
34	Strainer	AISI 316
36	Suction Interconnector	AISI 316
37	Pump Shaft	AISI 316
44	Coupling	AISI 316
47	Strap	AISI 316
52	Cable Guard	AISI 316
86	Valve Seat	AISI 316 + HNBR
87	Neck Ring Nut	AISI 316 + HNBR
88	Nut	AISI 316
89	Bearing	HNBR
90	Screw	AISI 316
91	Key	AISI 316
92	O-ring	HNBR

Project	Project ID	Created by	Created on	Last update