| | Technical Data<br>Submersible Pump - GSP 18-14 | Revision no. | Page:<br>1 |
|---|---|---|---|

| | Receiver | From |
|---|---|---|
| Company name | | |
| Respons. Department | | |
| Person in charge | | |
| Phone number | | |
| Fax no | | |
| E-mail address | | |

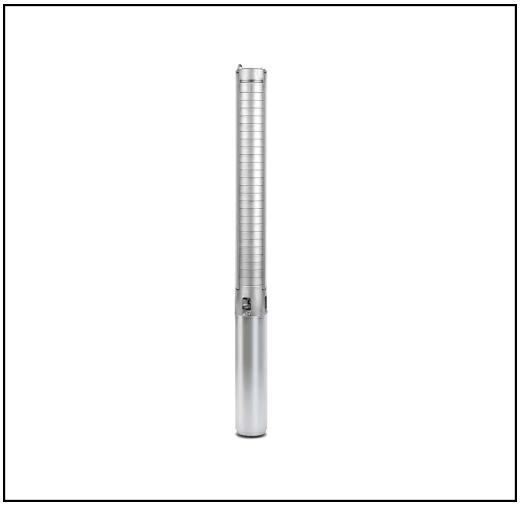

**Brand: Gol Pumps**
**Model: GSP 18-14**

| Weight (lb) | | |
|---|---|---|
| Pump | Motor | Pump + Motor |
| 9 | 29.7 | 38.7 |

| Cable | |
|---|---|
| Length (Ft) | AWG |
| 3.9 | 14 |

## Dimensions:

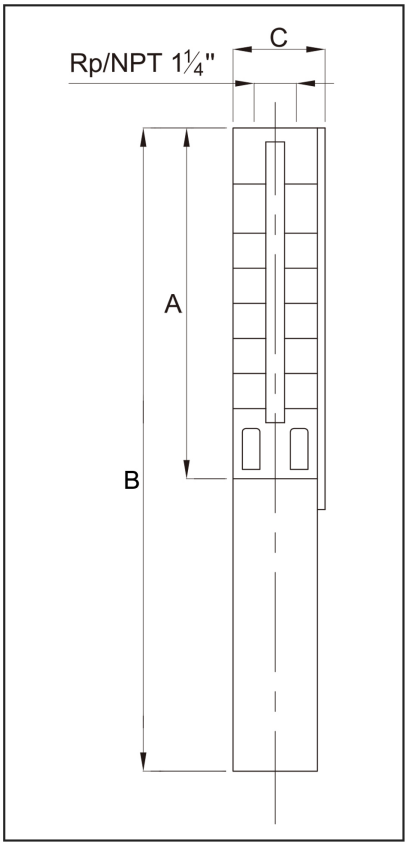


| Outlet | Motor Dia. | Dimensions (inch) | | |
|---|---|---|---|---|
| | | A | B | C |
| NPT 1 1/4" | 4" | 18.1 | 34.8 | 3.9 |

| Project | Project ID | Created by | Created on | Last update |
|---|---|---|---|---|
| | | | | |

| | Performance Curves<br>Submersible Pump - GSP 18-14 | Revision no. | Page:<br>2 |
|---|---|---|---|

| | Receiver | From |
|---|---|---|
| Company name | | |
| Respons. Department | | |
| Person in charge | | |
| Phone number | | |
| Fax no | | |
| E-mail address | | |

| Pump Model | Motor | | Q Capacity 3450RPM | | | | | | | |
|---|---|---|---|---|---|---|---|---|---|---|
| | P2 | | G/Min | 0 | 9.2 | 10.6 | 13.2 | 15.9 | 18.5 | 21.1 |
| | kW | HP | Head in Feet | 430 | 371 | 361 | 338 | 308 | 259 | 200 |
| GSP 18-14 | 1.1 | 1.5 | | | | | | | | |

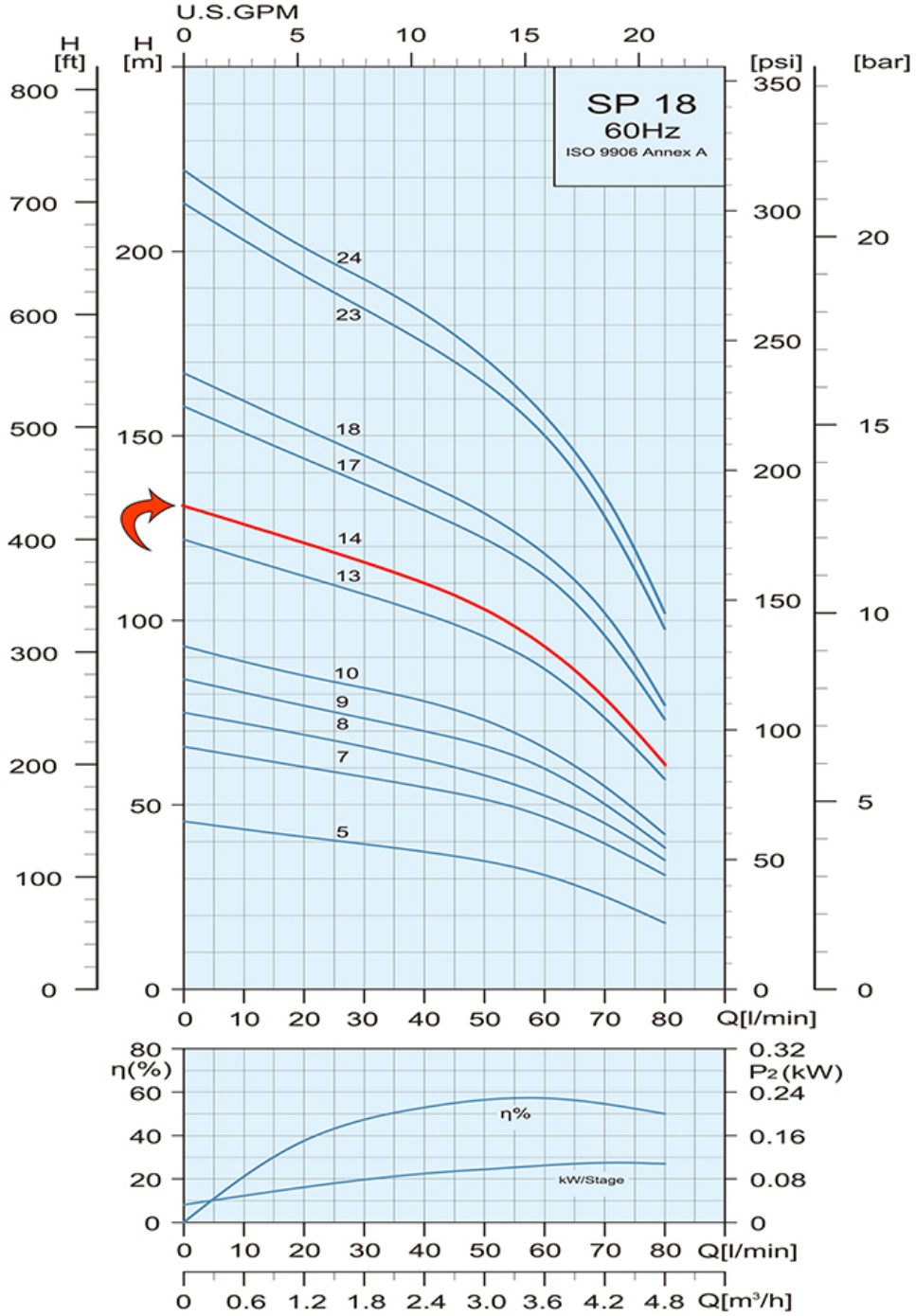


| Project | Project ID | Created by | Created on | Last update |
|---|---|---|---|---|
| | | | | |

# Part List and Materials

## Submersible Pump - GSP 18-14

Revision no.

Page: 3

| | Receiver | From |
|---|---|---|
| Company name | | |
| Respons. Department | | |
| Person in charge | | |
| Phone number | | |
| Fax no | | |
| E-mail address | | |

| Motor Model | P2 | | S.F | Voltage | Phase | Wire | In | Imax | Istart | PF (%) | | Efficiency (%) | | RPM | Thrust | Capacitor |
|---|---|---|---|---|---|---|---|---|---|---|---|---|---|---|---|---|
| | kW | HP | | V | PH | | A | A | A | Allowable Load | Overload Factor | Allowable Load | Overload Factor | | N | UF |
| 4CN3536M | 1.1 | 1.5 | 1.3 | 230 | Single | 2 | 7.7 | 9.4 | 31.8 | 0.95 | 0.96 | 64.3 | 64.8 | 3450 | 3000 | 30UF 450V |

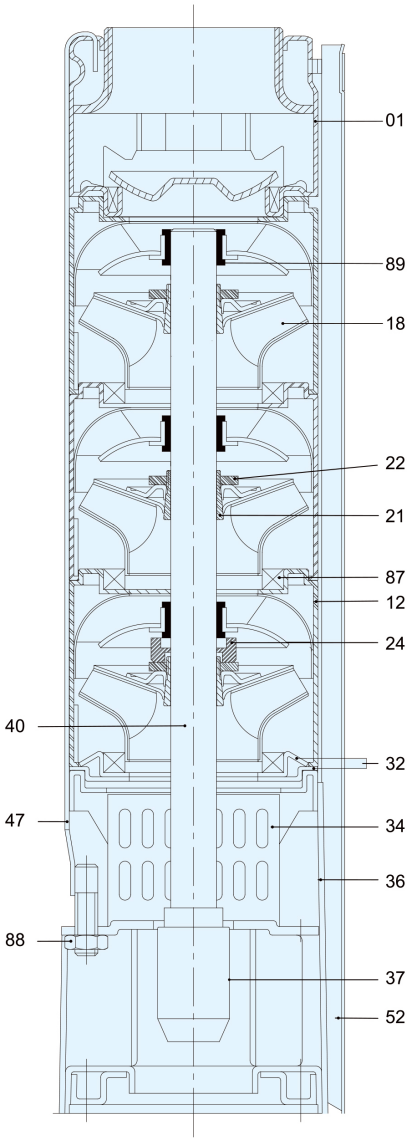


| Pos. | Part Name | Materials |
|---|---|---|
| 01 | Discharge | AISI 316 |
| 12 | Diffuser | AISI 316 |
| 18 | Impeller | AISI 316 |
| 21 | Split Cone | AISI 316 |
| 22 | Split Cone Nut | AISI 316 |
| 24 | Stop Ring | Carbon + Graphite + PTFE |
| 32 | Neck Ring Retainer | AISI 316 |
| 34 | Strainer | AISI 316 |
| 36 | Suction Interconnector | AISI 316 |
| 37 | Coupling | AISI 316 |
| 40 | Pump Shaft | AISI 316 |
| 47 | Strap | AISI 316 |
| 52 | Cable Guard | AISI 316 |
| 87 | Neck Ring | AISI 316 + HNBR |
| 88 | Nut | AISI 316 |
| 89 | Bearing | HNBR |

| Project | Project ID | Created by | Created on | Last update |
|---|---|---|---|---|
| | | | | |