| | Technical Data<br>Submersible Pump - GSP 1100-2 | Revision no. | Page:<br>1 |
|---|---|---|---|

| | Receiver | From |
|---|---|---|
| Company name | | |
| Respons. Department | | |
| Person in charge | | |
| Phone number | | |
| Fax no | | |
| E-mail address | | |

**Brand: Gol Pumps**
**Model: GSP 1100-2**

| Weight (lb) | | |
|---|---|---|
| Pump | Motor | Pump + Motor |
| 122.8 | 462 | 584.8 |

| Cable | |
|---|---|
| Length (Ft) | ($mm^2$) |
| 11.5 | (1x25)x3 |

## Dimensions:

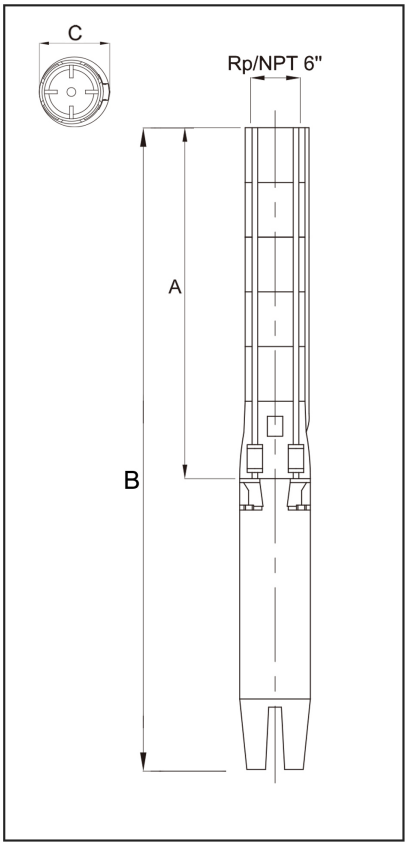


| Outlet | Motor Dia. | Dimensions (inch) | | |
|---|---|---|---|---|
| | | A | B | C |
| NPT 6" | 8" | 37.3" | 93.1" | 9.3" |

| Project | Project ID | Created by | Created on | Last update |
|---|---|---|---|---|
| | | | | |

# Performance Curves

## Submersible Pump - GSP 1100-2

| Revision no. | Page: |
|---|---|
| | 2 |

| Receiver | From |
|---|---|
| Company name | |
| Respons. Department | |
| Person in charge | |
| Phone number | |
| Fax no | |
| E-mail address | |

| Pump Model | Motor | | Q Capacity 3450RPM | | | | | | | | | | | |
|---|---|---|---|---|---|---|---|---|---|---|---|---|---|---|
| | P2 | | G/Min | 132.1 | 264.2 | 396.3 | 528.3 | 660.4 | 792.5 | 924.6 | 1057 | 1189 | 1321 | 1453 |
| | kW | HP | Head in Feet | 367.5 | 357.6 | 337.9 | 318.2 | 295.3 | 275.6 | 259.2 | 242.8 | 219.8 | 190.3 | 147.6 |
| GSP 1100-2 | 66 | 90 | | | | | | | | | | | | |

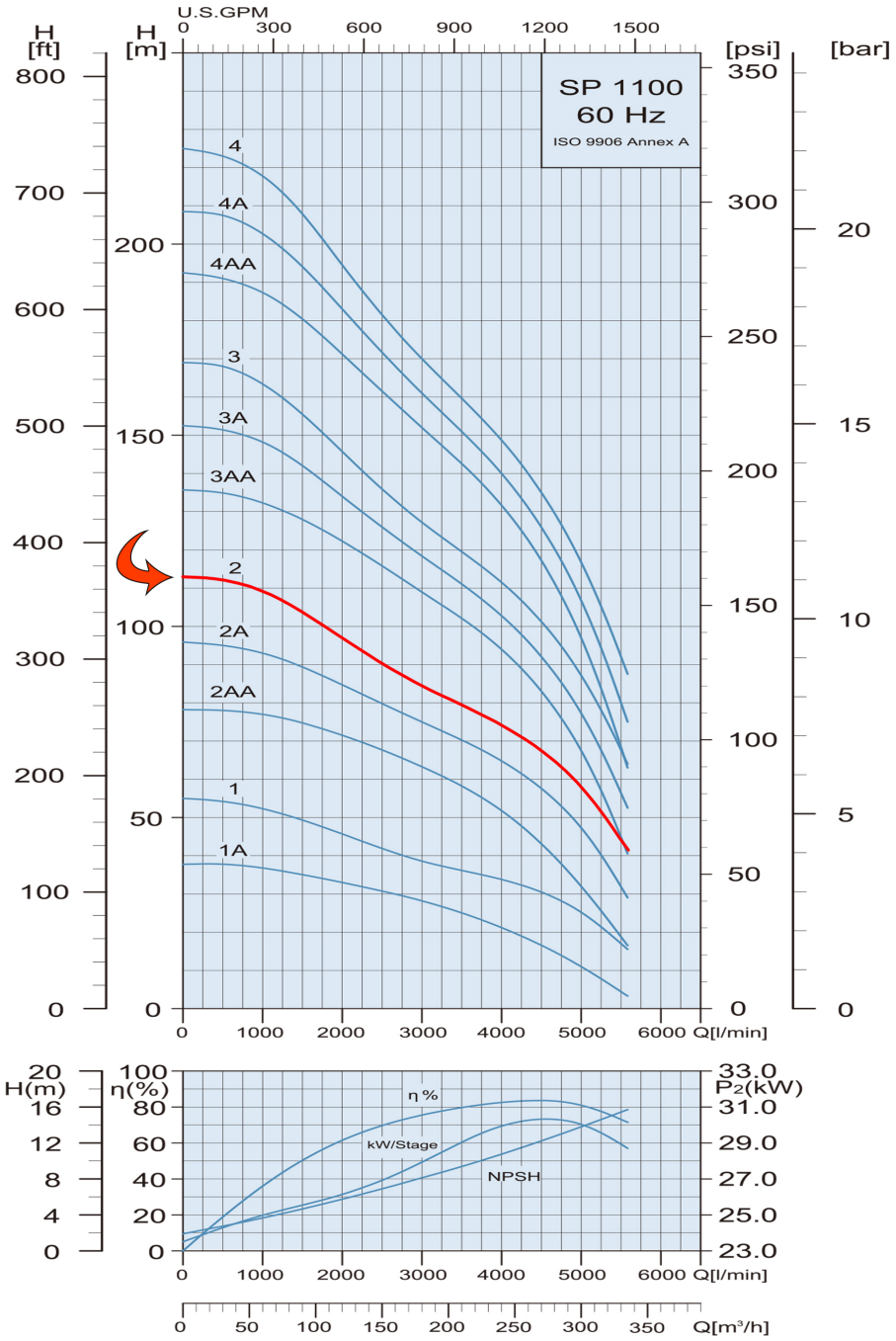


| Project | Project ID | Created by | Created on | Last update |
|---|---|---|---|---|
| | | | | |

# Part List and Materials

## Submersible Pump - GSP 1100-2

| Revision no. | Page: |
|---|---|
| | 3 |

| | Receiver | From |
|---|---|---|
| Company name | | |
| Respons. Department | | |
| Person in charge | | |
| Phone number | | |
| Fax no | | |
| E-mail address | | |

| Motor Model | $P_{MAX}$ | | Voltage | Phase | $I_N$ | $I_A$ | η (Eff.) % | | | cosϕ (PF) | | | RPM | Thrust |
|---|---|---|---|---|---|---|---|---|---|---|---|---|---|---|
| | kW | HP | V | PH | A | A | 2/4 | 3/4 | 4/4 | 2/4 | 3/4 | 4/4 | | N |
| **8F90** | 66 | 90 | 460 | Three | 114 | 456 | 87 | 88 | 87.1 | 0.72 | 0.81 | 0.84 | 3483 | 70000 |

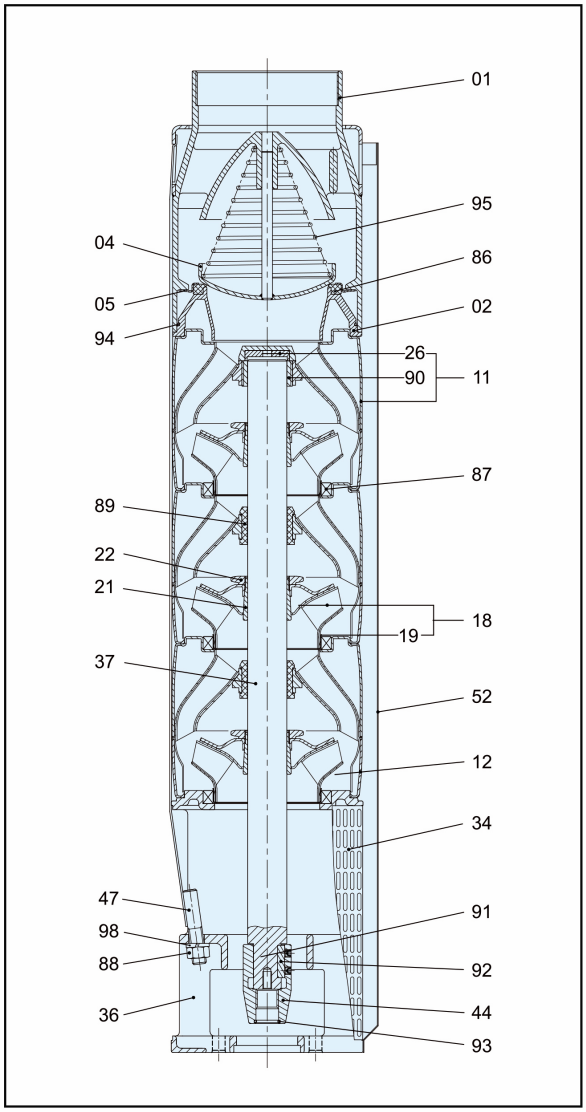


| Pos. | Part Name | Materials |
|---|---|---|
| 01 | Discharge | AISI 316 |
| 02 | Lower Valve Seat Retainer | AISI 316 |
| 04 | Valve Cup | AISI 316 |
| 05 | Upper Valve Seat Retainer | AISI 316 |
| 11 | Upper Diffuser | AISI 316 |
| +26 | Spacing Washer for Stop Ring | Carbon Fiber + MoS2 + PTFE |
| +90 | Upper Bearing | AISI 316 + HNBR |
| 12 | Diffuser | AISI 316 |
| 18 | Impeller | AISI 316 |
| 18 | Impeller-A | AISI 316 |
| +19 | Ring Of Impeller | AISI 316 |
| 21 | Split Cone | AISI 316 |
| 22 | Split Cone Nut | AISI 316 |
| 34 | Strainer-one lead | AISI 316 |
| 34 | Strainer-two leads | AISI 316 |
| 36 | Suction Interconnector - 6" | AISI 316 |
| 36 | Suction Interconnector - 8" | AISI 316 |
| 37 | Shaft | AISI 316 |
| 44 | Coupling - 6" | AISI 316 |
| 44 | Coupling - 8" | AISI 316 |
| 47 | Strap | AISI 316 |
| 52 | Cable Guard | AISI 316 |
| 86 | Valve Seat | HNBR70 |
| 87 | Neck Ring | HNBR |
| 88 | Nut | AISI 316 |
| 89 | Bearing | HNBR70 |
| 91 | Screw - 6" | AISI 316 |
| 91 | Screw - 8" | AISI 316 |
| 92 | Key - 6" | AISI 316 |
| 92 | Key - 8" | AISI 316 |
| 93 | O-ring - 6" | HNBR70 |
| 93 | O-ring - 8" | HNBR70 |
| 94 | O-ring | HNBR70 |
| 95 | Spring | AISI 316 |
| 98 | Spring Washer | AISI 316 |

| Project | Project ID | Created by | Created on | Last update |
|---|---|---|---|---|
| | | | | |