	Technical Data Submersible Pump - A8X 125 CR 40/2	Revision no.	Page: 1

	Receiver	From
Company name		
Respons. Department		
Person in charge		
Phone number		
Fax no		
E-mail address		

Brand: Gol Pumps
Model: A8X 125 CR 40/2
Motor Material: Cast Iron

Weight (lb)		
Pump	Motor	Pump + Motor
85.8	198.5	284.3

Cable	
Length (Ft)	AWG
13.1	8

Dimensions:

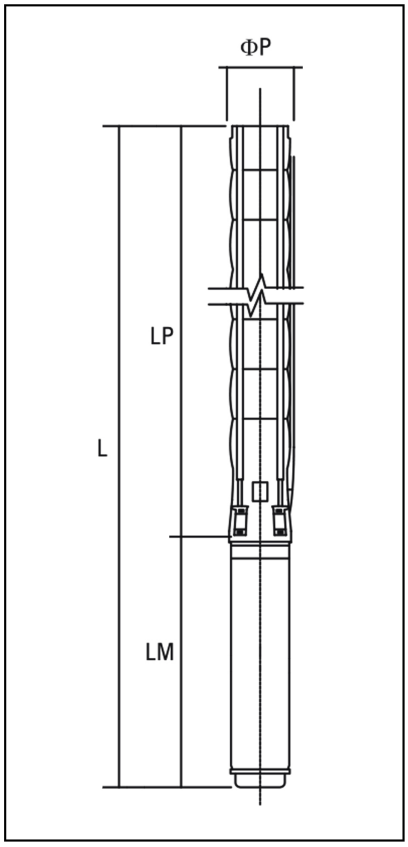

Outlet	Motor Dia.	Dimensions (inch)			
		LP	LM	L	ϕP
NPT 6"	6"	33.1	42.8	75.9	8.4

Project	Project ID	Created by	Created on	Last update

Performance Curves

Submersible Pump - A8X 125 CR 40/2

Revision no.	Page:
	2

	Receiver	From
Company name		
Respons. Department		
Person in charge		
Phone number		
Fax no		
E-mail address		

Pump Model	Stages	Motor		Q Capacity 3500RPM									
				Gal/min	0	176	528	572	616	660	704	748	793
		kW	HP	Head in Feet	305	289	240	230	220	210	197	184	171
A8X 125 CR 40/2	2	30	40										

The hydraulic working caracteristics have been taken with water at 15°C, at the atmoshperical pressure of 1 bar and specific gravity is 1 gr/cm³

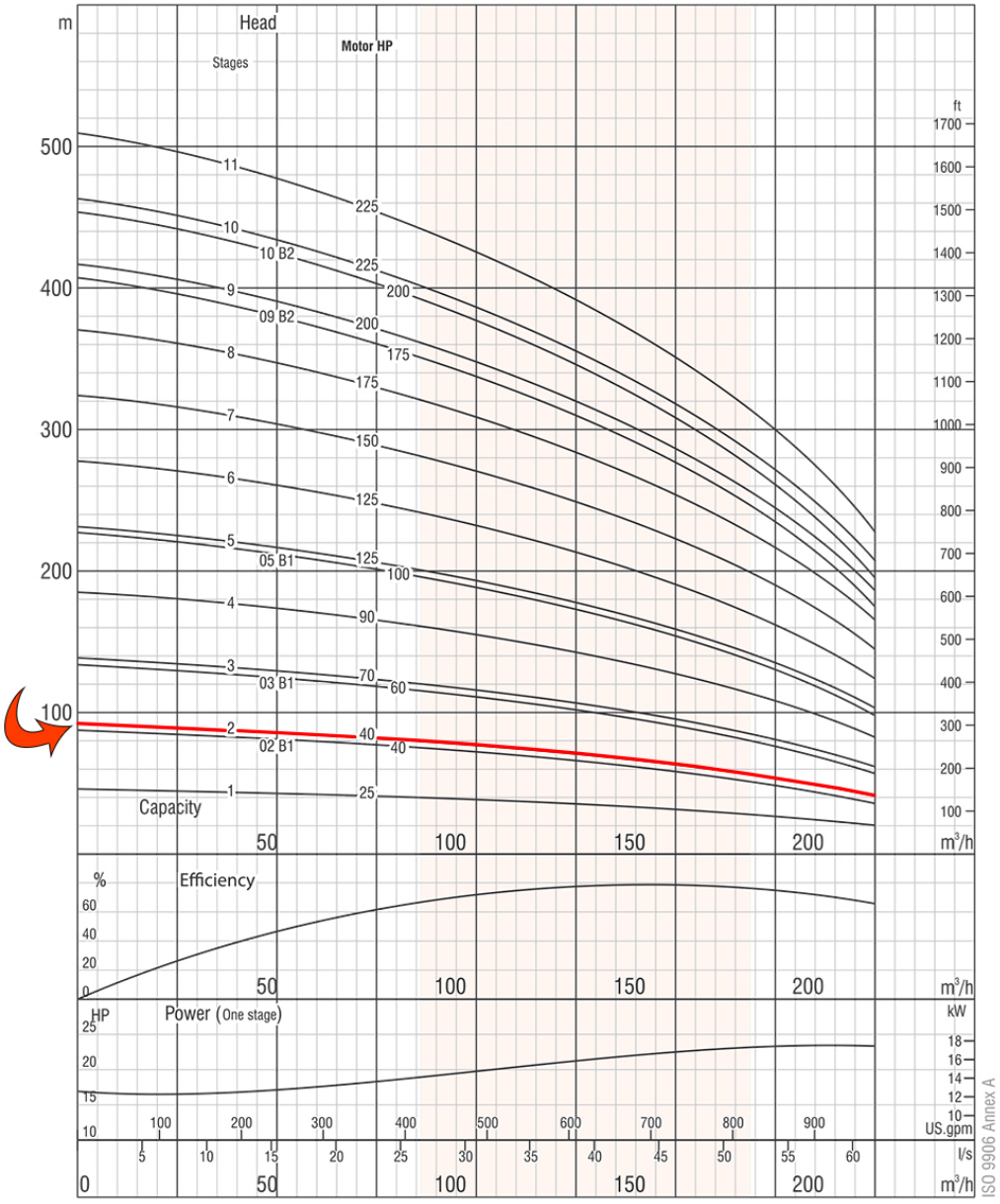

Due to continuous improvement in design we reserve the right to amend specifications or data without prior notice.

Project	Project ID	Created by	Created on	Last update

Part List and Materials

Submersible Pump - A8X 125 CR 40/2

Revision no.	Page:
	3

Receiver	From
Company name	
Respons. Department	
Person in charge	
Phone number	
Fax no	
E-mail address	

Motor Model	P2		S.F	Voltage	Phase	In	Imax	Istart	PF (%)		Efficiency (%)		RPM	Thrust
	kW	HP		V	PH	A	A	A	Allowable Load	Overload Factor	Allowable Load	Overload Factor		N
6CF8376D	30	40	1.15	460	Three	54.7	64.2	307.8	0.85	0.87	84.3	84.3	3450	27500

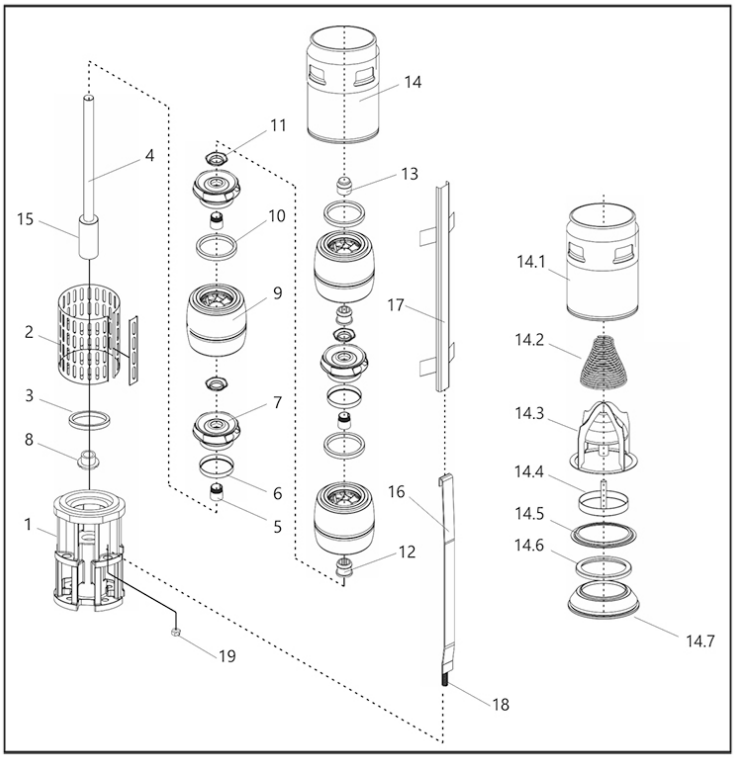

No.	Part Name	Materials
1	Suction Case	Stainless Steel (AISI 304L)
2	Strainer	Stainless Steel (AISI 304L)
3	Suction Case Wear Ring	Rubber
4	Pump Shaft	Stainless Steel (AISI 431)
5	Collet	Stainless Steel (AISI 304)
6	Impeller Wear Ring	Stainless Steel (AISI 304L)
7	Impeller	Stainless Steel (AISI 304L)
8	Stop Ring	Bronze (ASTM B145-4A)
9	Diffuser	Stainless Steel (AISI 304L)
10	Diffuser Wear Ring	Rubber
11	Nut for Collet	Stainless Steel (AISI 304L)
12	Bearing	Rubber
13	Upper Bearing	Bronze (ASTM B145-4A)
14	Discharge Case	Stainless Steel (AISI 304L)

No.	Part Name	Materials
14.1	Discharge Case Body	Stainless Steel (AISI 304L)
14.2	Valve Cup Spring	Stainless Steel (AISI 304L)
14.3	Valve Cup Guide	Stainless Steel (AISI 304L)
14.4	Valve Cup	Stainless Steel (AISI 304L)
14.5	Upper Valve Cup Seat Retainer	Stainless Steel (AISI 304L)
14.6	Valve Cup Seat	Rubber
14.7	Lower Valve Cup Seat Retainer	Stainless Steel (AISI 304L)
15	Coupling	Stainless Steel (AISI 431)
16	Tie Rod	Stainless Steel (AISI 304L)
17	Cable Guard	Stainless Steel (AISI 304L)
18	Tie Rod Stud	Stainless Steel (AISI 316)
19	Tie Rod Nut	Stainless Steel (AISI 304L)
20	Name Plate	Stainless Steel (AISI 304L)

Project	Project ID	Created by	Created on	Last update