| | Technical Data<br>Submersible Pump - A8X 110 CR 50/3 | Revision no. | Page:<br>1 |
|---|---|---|---|

| | Receiver | From |
|---|---|---|
| Company name | | |
| Respons. Department | | |
| Person in charge | | |
| Phone number | | |
| Fax no | | |
| E-mail address | | |

**Brand: Gol Pumps**
**Model: A8X 110 CR 50/3**

| Weight (lb) | | |
|---|---|---|
| Pump | Motor | Pump + Motor |
| 99 | 237.6 | 336.6 |

| Cable | |
|---|---|
| Length (Ft) | AWG |
| 13.1 | 8 |

## Dimensions:

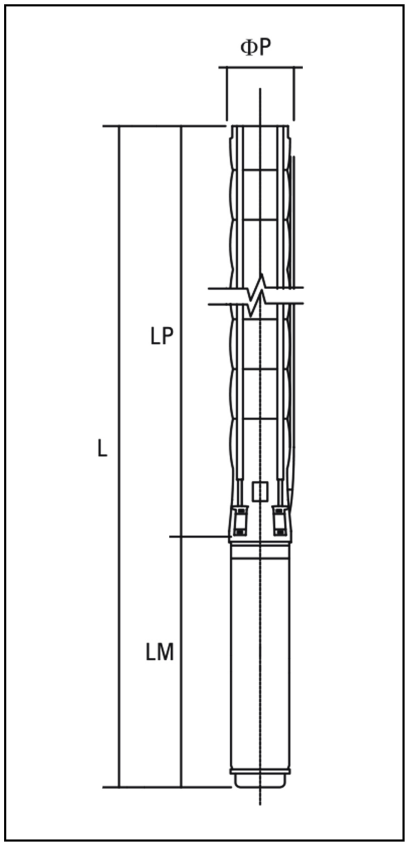


| Outlet | Motor Dia. | Dimensions (inch) | | | |
|---|---|---|---|---|---|
| | | LP | LM | L | ϕP |
| NPT 5" | 6" | 39.3 | 49.6 | 88.9 | 8.4 |

| Project | Project ID | Created by | Created on | Last update |
|---|---|---|---|---|
| | | | | |

| | Performance Curves<br>Submersible Pump - A8X 110 CR 50/3 | Revision no. | Page:<br>2 |
|---|---|---|---|

| | Receiver | From |
|---|---|---|
| Company name | | |
| Respons. Department | | |
| Person in charge | | |
| Phone number | | |
| Fax no | | |
| E-mail address | | |

| Pump Model | Stages | Motor | | Q Capacity 3500RPM | | | | | | | | | |
|---|---|---|---|---|---|---|---|---|---|---|---|---|---|
| | | | | Gal/min | 0 | 220 | 440 | 484 | 528 | 572 | 616 | 660 | 704 |
| | | kW | HP | Head in Feet | 390 | 351 | 305 | 292 | 276 | 259 | 243 | 220 | 197 |
| A8X 110 CR 50/3 | 3 | 37 | 50 | | | | | | | | | | |

*The hydraulic working caracteristics have been taken with water at 15°C, at the atmoshperical pressure of 1 bar and specific gravity is 1 gr/cm³*

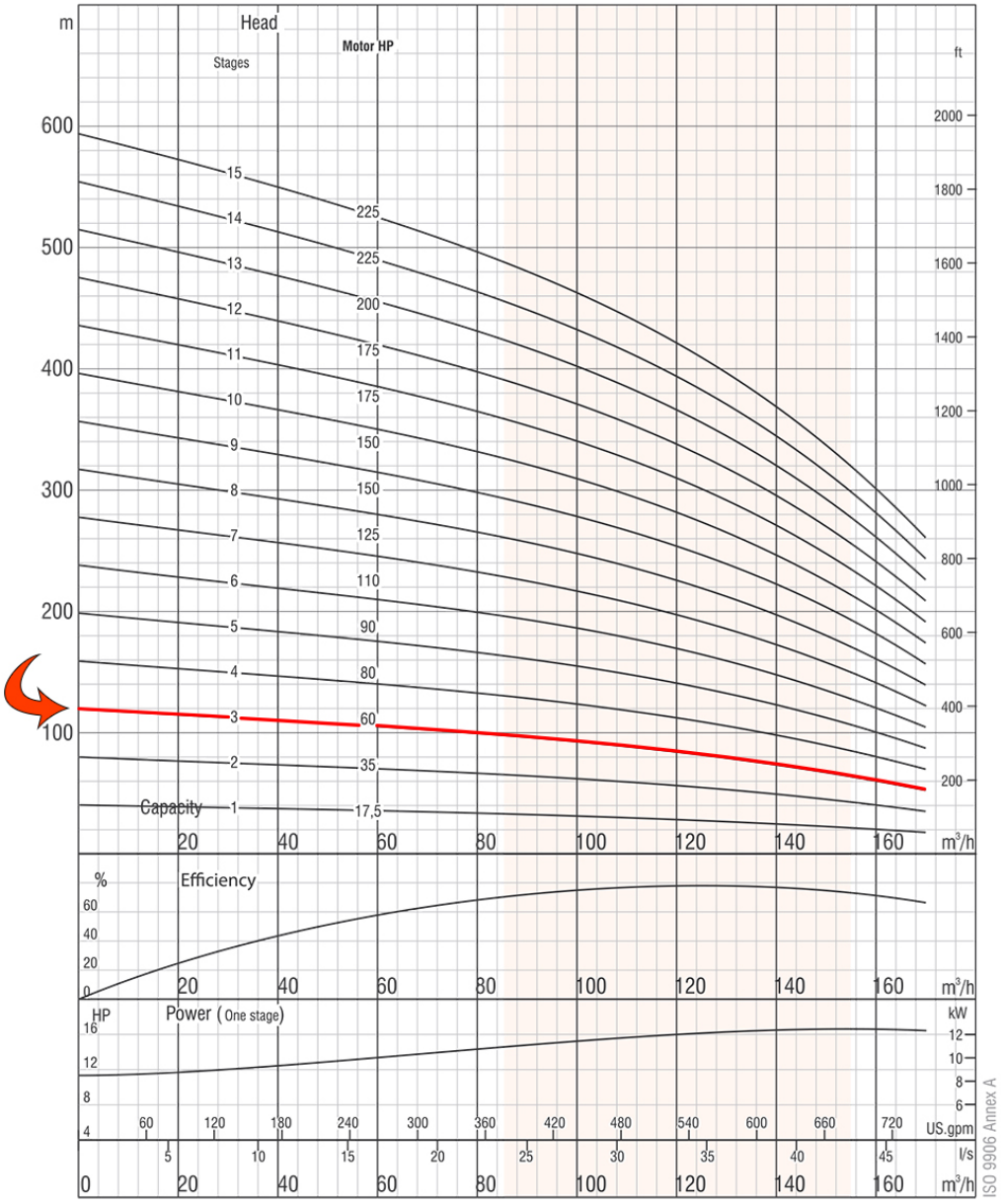


*Due to continuous improvement in design we reserve the right to amend specifications or data without prior notice.*

| Project | Project ID | Created by | Created on | Last update |
|---|---|---|---|---|
| | | | | |

# Part List and Materials

## Submersible Pump - A8X 110 CR 50/3

Revision no.

Page: 3

| Receiver | From |
|---|---|
| Company name | |
| Respons. Department | |
| Person in charge | |
| Phone number | |
| Fax no | |
| E-mail address | |

| Motor Model | P2 | | S.F | Voltage | Phase | In | Imax | Istart | PF (%) | | Efficiency (%) | | RPM | Thrust |
|---|---|---|---|---|---|---|---|---|---|---|---|---|---|---|
| | kW | HP | | V | PH | A | A | A | Allowable Load | Overload Factor | Allowable Load | Overload Factor | | N |
| 6CS8386D | 37 | 50 | 1.15 | 460 | Three | 65.9 | 77.6 | 382.3 | 0.84 | 0.84 | 84 | 83.8 | 3450 | 27500 |

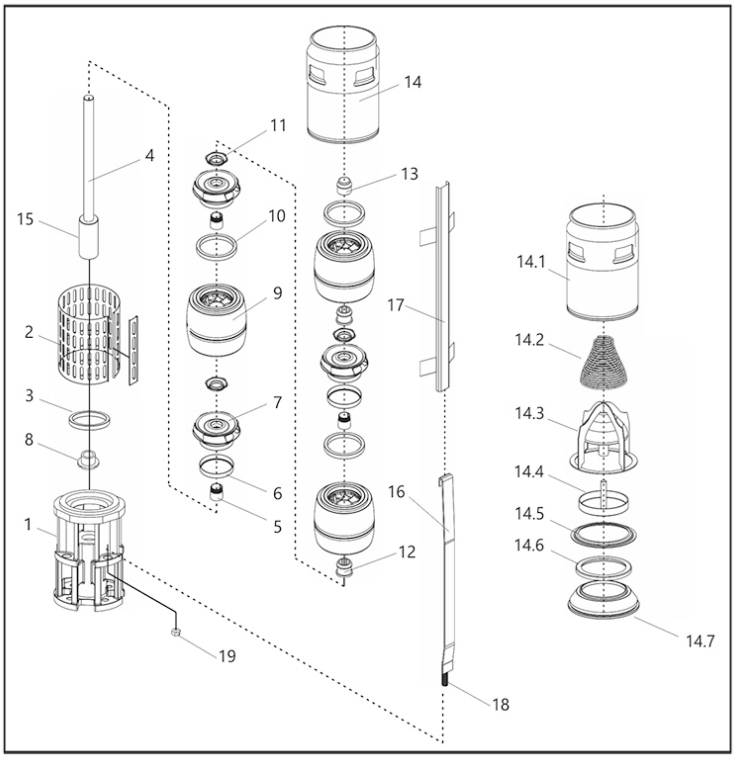


| No. | Part Name | Materials |
|---|---|---|
| 1 | Suction Case | Stainless Steel (AISI 304L) |
| 2 | Strainer | Stainless Steel (AISI 304L) |
| 3 | Suction Case Wear Ring | Rubber |
| 4 | Pump Shaft | Stainless Steel (AISI 431) |
| 5 | Collet | Stainless Steel (AISI 304) |
| 6 | Impeller Wear Ring | Stainless Steel (AISI 304L) |
| 7 | Impeller | Stainless Steel (AISI 304L) |
| 8 | Stop Ring | Bronze (ASTM B145-4A) |
| 9 | Diffuser | Stainless Steel (AISI 304L) |
| 10 | Diffuser Wear Ring | Rubber |
| 11 | Nut for Collet | Stainless Steel (AISI 304L) |
| 12 | Bearing | Rubber |
| 13 | Upper Bearing | Bronze (ASTM B145-4A) |
| 14 | Discharge Case | Stainless Steel (AISI 304L) |

| No. | Part Name | Materials |
|---|---|---|
| 14.1 | Discharge Case Body | Stainless Steel (AISI 304L) |
| 14.2 | Valve Cup Spring | Stainless Steel (AISI 304L) |
| 14.3 | Valve Cup Guide | Stainless Steel (AISI 304L) |
| 14.4 | Valve Cup | Stainless Steel (AISI 304L) |
| 14.5 | Upper Valve Cup Seat Retainer | Stainless Steel (AISI 304L) |
| 14.6 | Valve Cup Seat | Rubber |
| 14.7 | Lower Valve Cup Seat Retainer | Stainless Steel (AISI 304L) |
| 15 | Coupling | Stainless Steel (AISI 431) |
| 16 | Tie Rod | Stainless Steel (AISI 304L) |
| 17 | Cable Guard | Stainless Steel (AISI 304L) |
| 18 | Tie Rod Stud | Stainless Steel (AISI 316) |
| 19 | Tie Rod Nut | Stainless Steel (AISI 304L) |
| 20 | Name Plate | Stainless Steel (AISI 304L) |

| Project | Project ID | Created by | Created on | Last update |
|---|---|---|---|---|
| | | | | |