	Technical Data Submersible Pump - A6X 46 CR 12/4	Revision no.	Page: 1

	Receiver	From
Company name		
Respons. Department		
Person in charge		
Phone number		
Fax no		
E-mail address		

Brand: Gol Pumps
Model: A6X 46 CR 12/4

Weight (lb)		
Pump	Motor	Pump + Motor
33	117.5	150.5

Cable	
Length (Ft)	AWG
13.1	10

Dimensions:

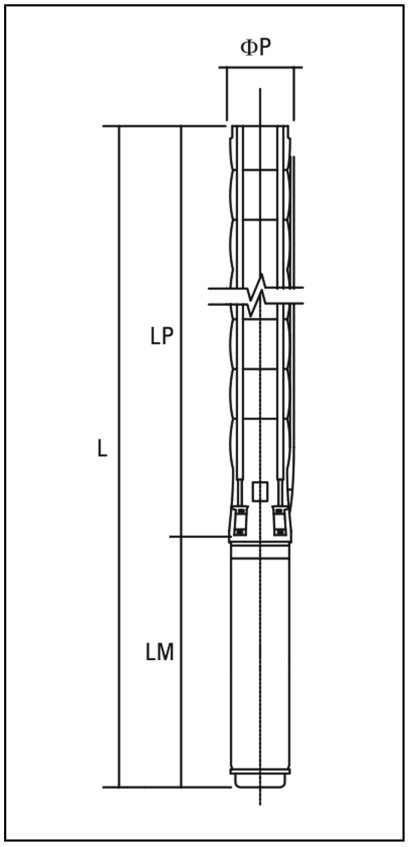

Outlet	Motor Dia.	Dimensions (inch)			
		LP	LM	L	ϕP
NPT 4"	6"	28"	28.3"	56.3"	5"

Project	Project ID	Created by	Created on	Last update

Performance Curves

Submersible Pump - A6X 46 CR 12/4

Revision no.	Page:
	2

	Receiver	From
Company name		
Respons. Department		
Person in charge		
Phone number		
Fax no		
E-mail address		

Pump Model	Stages	Motor		Q Capacity 3500RPM									
				Gal/H	0	5283	9246	10567	11888	13209	14529	15850	17171
		kW	HP	Head in Feet	282	262	223	210	197	184	167	154	141
A6X 46 CR 12/4	4	11	15										

The hydraulic working caracteristics have been taken with water at 15°C, at the atmoshperical pressure of 1 bar and specific gravity is 1 gr/cm³

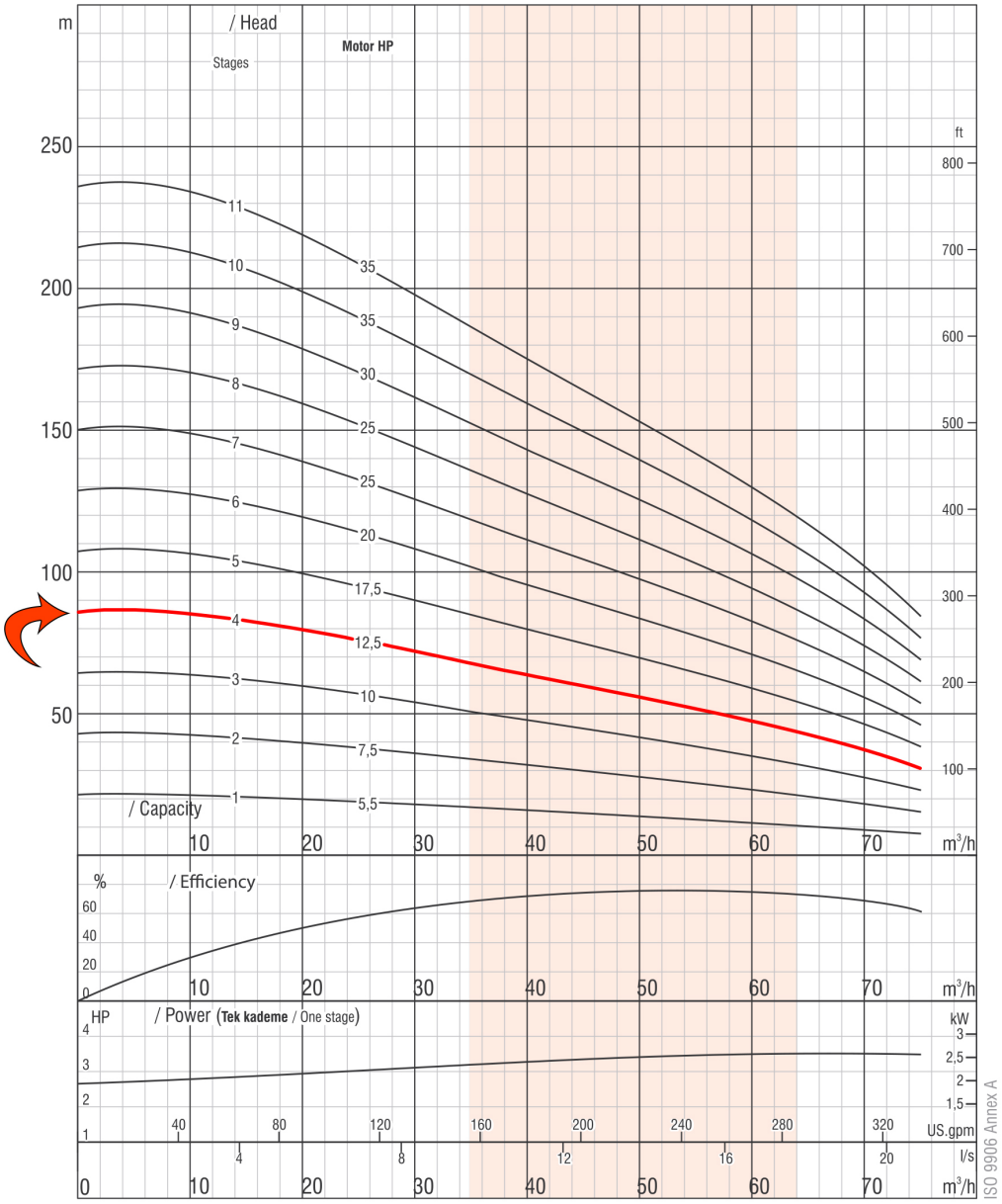

Due to continuous improvement in design we reserve the right to amend specifications or data without prior notice.

Project	Project ID	Created by	Created on	Last update

Part List and Materials

Submersible Pump - A6X 46 CR 12/4

Revision no.

	Receiver	From
Company name		
Respons. Department		
Person in charge		
Phone number		
Fax no		
E-mail address		

Motor Model	P2		S.F	Voltage	Phase	In	Imax	Istart	PF (%)		Efficiency (%)		RPM	Thrust
	kW	HP		V	PH	A	A	A	Allowable Load	Overload Factor	Allowable Load	Overload Factor		N
6CS7336D	11	15	1.15	460	Three	21.2	23.9	67.2	0.8	0.82	81.2	80.8	3450	15500

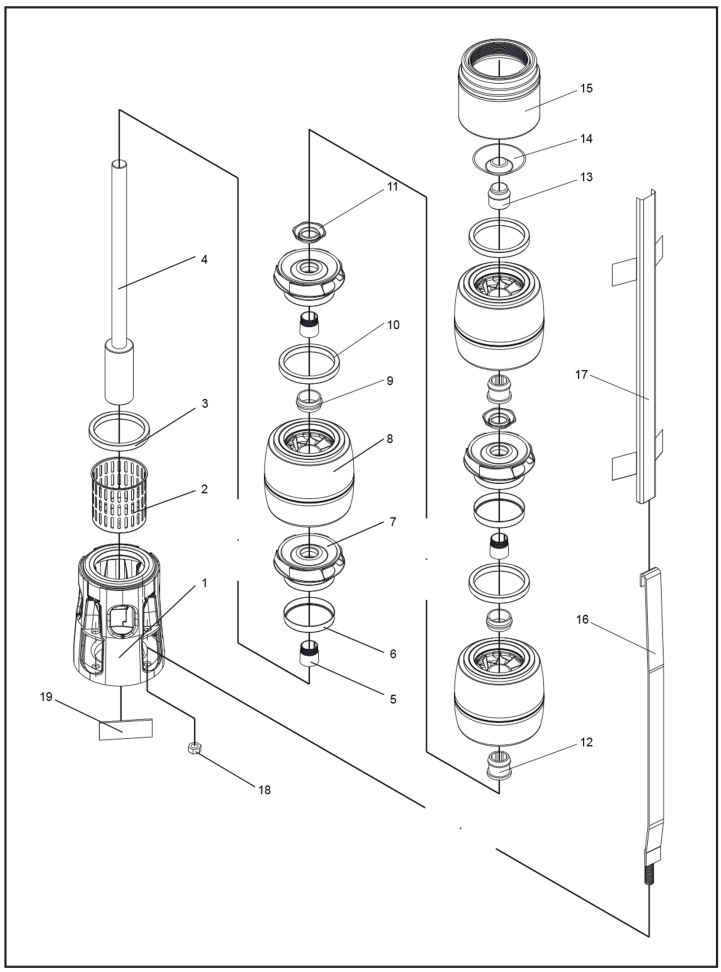

No.	Part Name	Materials
1	Suction Case	Stainless Steel (AISI 304L)
2	Filter	Stainless Steel (AISI 304)
3	Suction Case Wear Ring	Bronze (ASTM B145-4A)
4	Pump Shaft with Coupling	Stainless Steel (AISI 420)
5	Collet	Stainless Steel
6	Impeller Wear Rings	Stainless Steel (AISI 304)
7	Impeller	Stainless Steel (AISI 304L)
8	Diffuser	Stainless Steel (AISI 304L)
9	Rubber Bearing	Rubber
10	Diffuser Wear Ring	Rubber
11	Nut for Stop Ring	Stainless Steel (AISI 304L)
12	Bearing	Rubber
13	Shaft Stopper	Bronze (ASTM B145-4A)
14	Valve	Stainless Steel (AISI 304)
15	Discharge Case	Stainless Steel (AISI 304)
16	Tie Rod	Stainless Steel (AISI 304L)
17	Cable Guard	Stainless Steel (AISI 304)
18	Tie Rod Nut	Stainless Steel (AISI 303)
19	Name Plate	Stainless Steel (AISI 304)

Project	Project ID	Created by	Created on	Last update