| | Technical Data<br>Submersible Pump - A6X 30 CR 15/8 | Revision no. | Page:<br>1 |
|---|---|---|---|

| | Receiver | From |
|---|---|---|
| Company name | | |
| Respons. Department | | |
| Person in charge | | |
| Phone number | | |
| Fax no | | |
| E-mail address | | |

**Brand: Gol Pumps**
**Model: A6X 30 CR 15/8**

| Weight (lb) | | |
|---|---|---|
| Pump | Motor | Pump + Motor |
| 46 | 112.9 | 158.9 |

| Cable | |
|---|---|
| Length (Ft) | AWG |
| 13.1 | 10 |

## Dimensions:

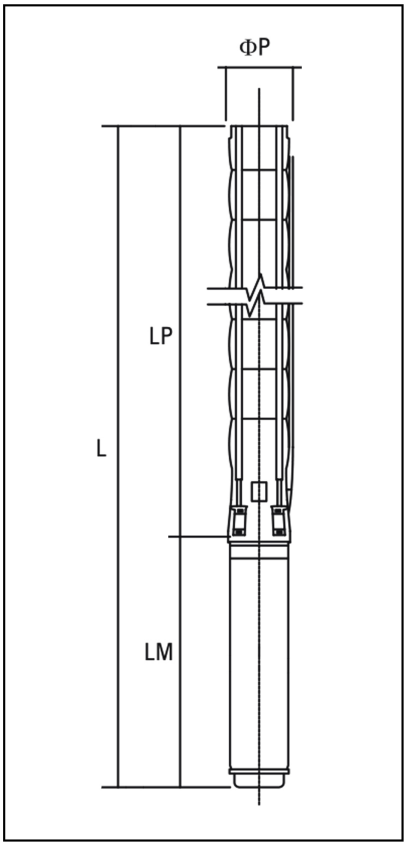


| Outlet | Motor Dia. | Dimensions (inch) | | | |
|---|---|---|---|---|---|
| | | LP | LM | L | ϕP |
| NPT 3" | 6" | 41" | 28.3" | 69.3" | 5" |

| Project | Project ID | Created by | Created on | Last update |
|---|---|---|---|---|
| | | | | |

| | Performance Curves<br>Submersible Pump - A6X 30 CR 15/8 | Revision no. | Page:<br>2 |
|---|---|---|---|

| | Receiver | From |
|---|---|---|
| Company name | | |
| Respons. Department | | |
| Person in charge | | |
| Phone number | | |
| Fax no | | |
| E-mail address | | |

| Pump Model | Stages | Motor | | Q Capacity 3500RPM | | | | | | | | | |
|---|---|---|---|---|---|---|---|---|---|---|---|---|---|
| | | | | Gal/H | 0 | 3170 | 5283 | 6340 | 7397 | 8454 | 9510 | 10567 | 11888 |
| | | kW | HP | Head in Feet | 453 | 427 | 390 | 371 | 344 | 315 | 279 | 240 | 184 |
| A6X 30 CR 15/8 | 8 | 11 | 15 | | | | | | | | | | |

*The hydraulic working caracteristics have been taken with water at 15°C, at the atmoshperical pressure of 1 bar and specific gravity is 1 gr/cm³*

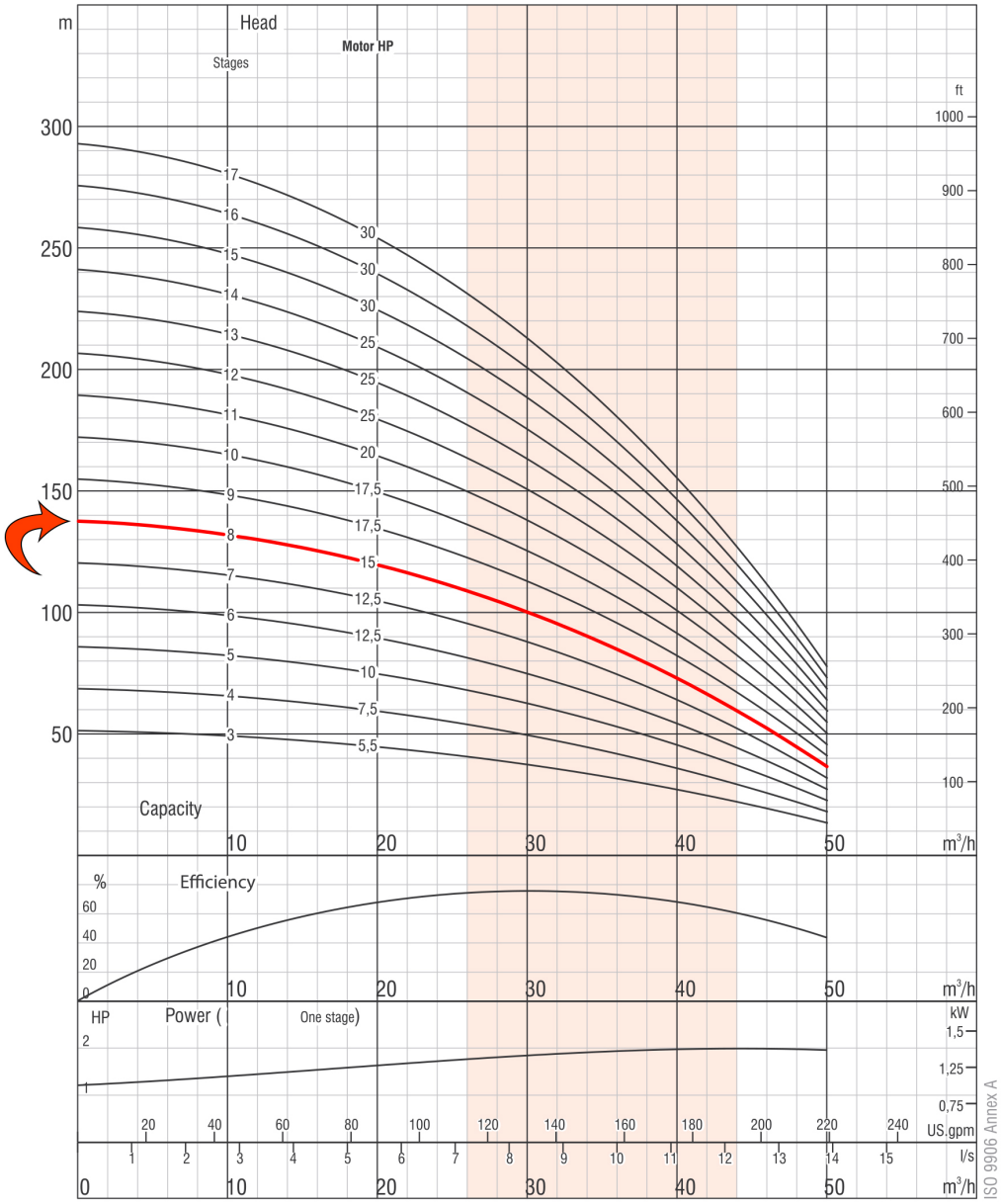


*Due to continuous improvement in design we reserve the right to amend specifications or data without prior notice.*

| Project | Project ID | Created by | Created on | Last update |
|---|---|---|---|---|
| | | | | |

# Part List and Materials

## Submersible Pump - A6X 30 CR 15/8

Revision no.



| | Receiver | From |
|---|---|---|
| Company name | | |
| Respons. Department | | |
| Person in charge | | |
| Phone number | | |
| Fax no | | |
| E-mail address | | |

| Motor Model | P2 | | S.F | Voltage | Phase | In | Imax | Istart | PF (%) | | Efficiency (%) | | RPM | Thrust |
|---|---|---|---|---|---|---|---|---|---|---|---|---|---|---|
| | kW | HP | | V | PH | A | A | A | Allowable Load | Overload Factor | Allowable Load | Overload Factor | | N |
| 6CS7136D | 11 | 15 | 1.15 | 230 | Three | 40.2 | 46.1 | 156 | 0.85 | 0.86 | 79.3 | 77.7 | 3450 | 15500 |

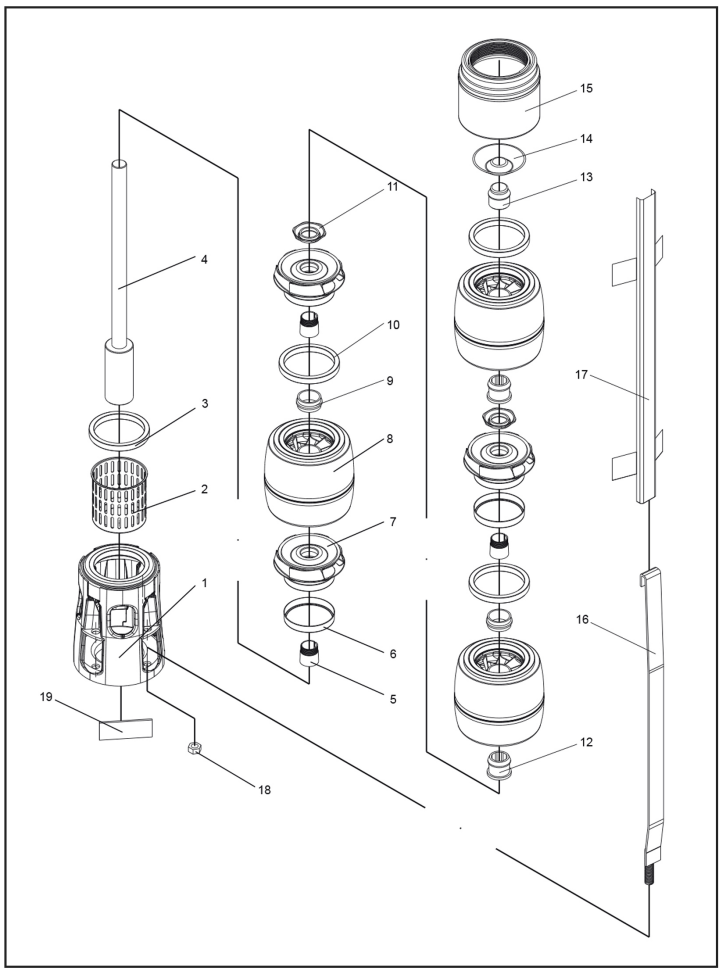


| No. | Part Name | Materials |
|---|---|---|
| 1 | Suction Case | Stainless Steel (AISI 304L) |
| 2 | Filter | Stainless Steel (AISI 304) |
| 3 | Suction Case Wear Ring | Bronze (ASTM B145-4A) |
| 4 | Pump Shaft with Coupling | Stainless Steel (AISI 420) |
| 5 | Collet | Stainless Steel |
| 6 | Impeller Wear Rings | Stainless Steel (AISI 304) |
| 7 | Impeller | Stainless Steel (AISI 304L) |
| 8 | Diffuser | Stainless Steel (AISI 304L) |
| 9 | Rubber Bearing | Rubber |
| 10 | Diffuser Wear Ring | Rubber |
| 11 | Nut for Stop Ring | Stainless Steel (AISI 304L) |
| 12 | Bearing | Rubber |
| 13 | Shaft Stopper | Bronze (ASTM B145-4A) |
| 14 | Valve | Stainless Steel (AISI 304) |
| 15 | Discharge Case | Stainless Steel (AISI 304) |
| 16 | Tie Rod | Stainless Steel (AISI 304L) |
| 17 | Cable Guard | Stainless Steel (AISI 304) |
| 18 | Tie Rod Nut | Stainless Steel (AISI 303) |
| 19 | Name Plate | Stainless Steel (AISI 304) |

| Project | Project ID | Created by | Created on | Last update |
|---|---|---|---|---|
| | | | | |