	Technical Data Submersible Pump - A6X 17 CR 10/8	Revision no.	Page: 1

	Receiver	From
Company name		
Respons. Department		
Person in charge		
Phone number		
Fax no		
E-mail address		

Brand: Gol Pumps
Model: A6X 17 CR 10/8

Weight (lb)		
Pump	Motor	Pump + Motor
35.2	104.1	139.3

Cable	
Length (Ft)	AWG
13.1	10

Dimensions:

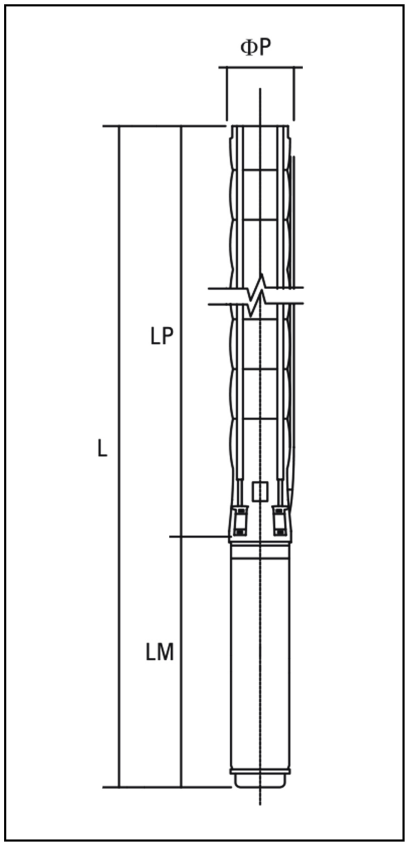

Outlet	Motor Dia.	Dimensions (inch)			
		LP	LM	L	ϕP
NPT 2 1/2"	6"	29.6	25.7	55.3	5

Project	Project ID	Created by	Created on	Last update

Performance Curves

Submersible Pump - A6X 17 CR 10/8

Revision no.	Page:
	2

Receiver	From
Company name	
Respons. Department	
Person in charge	
Phone number	
Fax no	
E-mail address	

Pump Model	Stages	Motor		Q Capacity 3500RPM									
				Gal/H	0	1585	3170	3963	4491	5019	5548	6076	7397
		kW	HP	Head in Feet	436	433	407	381	358	331	302	266	171
A6X 17 CR 10/8	8	7.5	10										

The hydraulic working caracteristics have been taken with water at 15°C, at the atmoshperical pressure of 1 bar and specific gravity is 1 gr/cm³

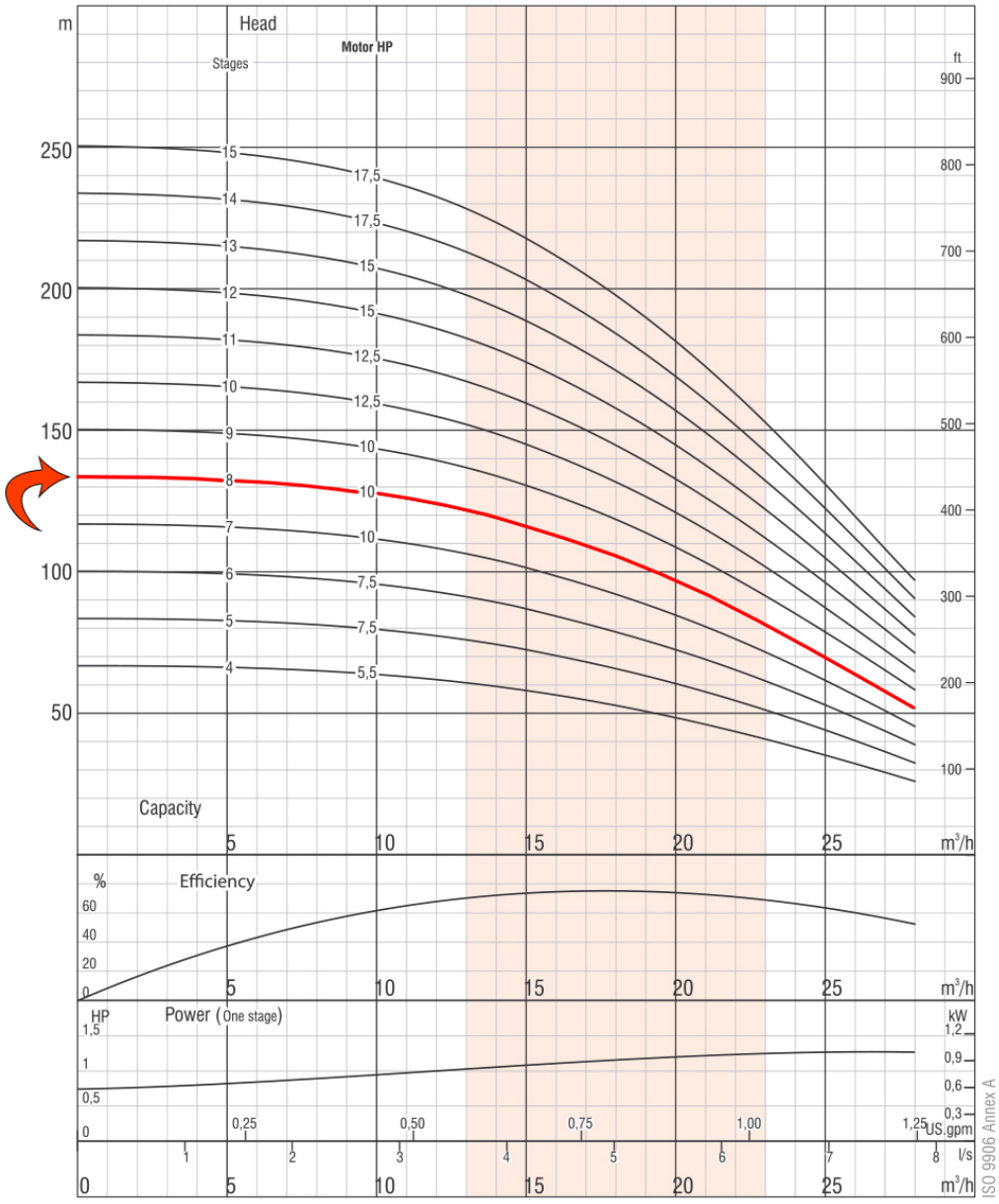

Due to continuous improvement in design we reserve the right to amend specifications or data without prior notice.

Project	Project ID	Created by	Created on	Last update

Part List and Materials

Submersible Pump - A6X 17 CR 10/8

Revision no.

Page: 3

	Receiver	From
Company name		
Respons. Department		
Person in charge		
Phone number		
Fax no		
E-mail address		

Motor Model	P2		S.F	Voltage	Phase	In	Imax	Istart	PF (%)		Efficiency (%)		RPM	Thrust
	kW	HP		V	PH	A	A	A	Allowable Load	Overload Factor	Allowable Load	Overload Factor		N
6CS7126D	7.5	10	1.15	230	Three	27.9	31.4	112	0.85	0.87	78.9	78.4	3450	15500

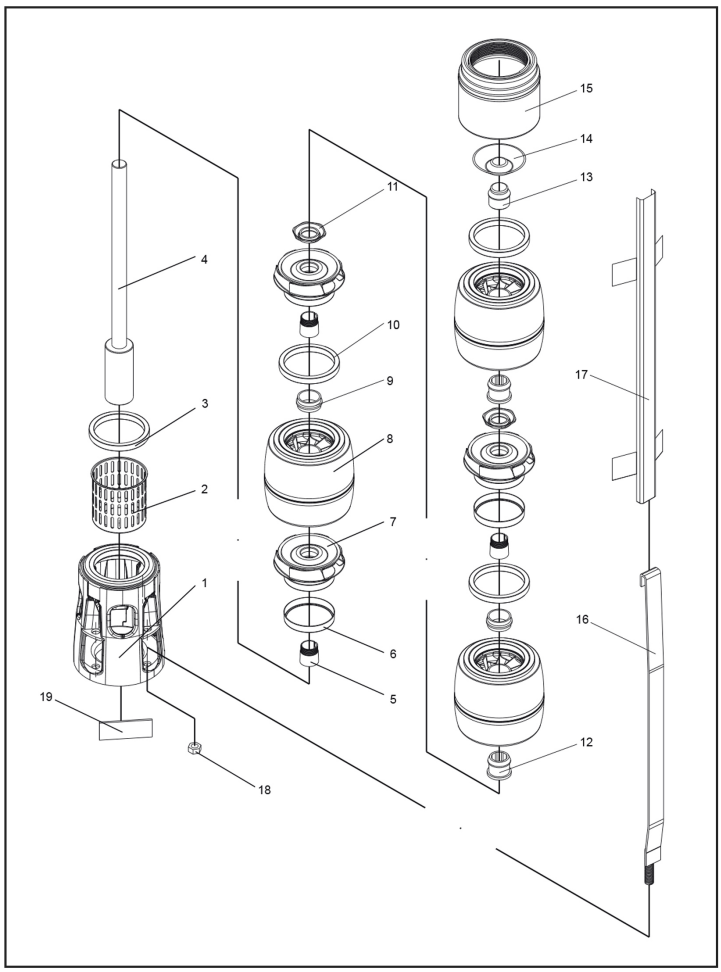

No.	Part Name	Materials
1	Suction Case	Stainless Steel (AISI 304L)
2	Filter	Stainless Steel (AISI 304)
3	Suction Case Wear Ring	Bronze (ASTM B145-4A)
4	Pump Shaft with Coupling	Stainless Steel (AISI 420)
5	Collet	Stainless Steel
6	Impeller Wear Rings	Stainless Steel (AISI 304)
7	Impeller	Stainless Steel (AISI 304L)
8	Diffuser	Stainless Steel (AISI 304L)
9	Rubber Bearing	Rubber
10	Diffuser Wear Ring	Rubber
11	Nut for Stop Ring	Stainless Steel (AISI 304L)
12	Bearing	Rubber
13	Shaft Stopper	Bronze (ASTM B145-4A)
14	Valve	Stainless Steel (AISI 304)
15	Discharge Case	Stainless Steel (AISI 304)
16	Tie Rod	Stainless Steel (AISI 304L)
17	Cable Guard	Stainless Steel (AISI 304)
18	Tie Rod Nut	Stainless Steel (AISI 303)
19	Name Plate	Stainless Steel (AISI 304)

Project	Project ID	Created by	Created on	Last update