	Technical Data Split Case Pump - 350GQS-44	Revision no.	Page: 1

	Receiver	From
Company name		
Respons. Department		
Person in charge		
Phone number		
Fax no		
E-mail address		

Brand: Gol Pumps
Model: 350GQS-44

Features:

- **Double Suction Pump:** Large Volume High Pressure Water Pump.
- **Bearing:** First Level SKF.
- **Shaft Seal:** Bergman SiC SS316 NBR machine seal, easy to use and long use life.
- **Motor Selection:** Can be match with different brand motors.
- **Quality Traceability:** With Materials MTC and related GQC&QA record.

Dimensions (mm):

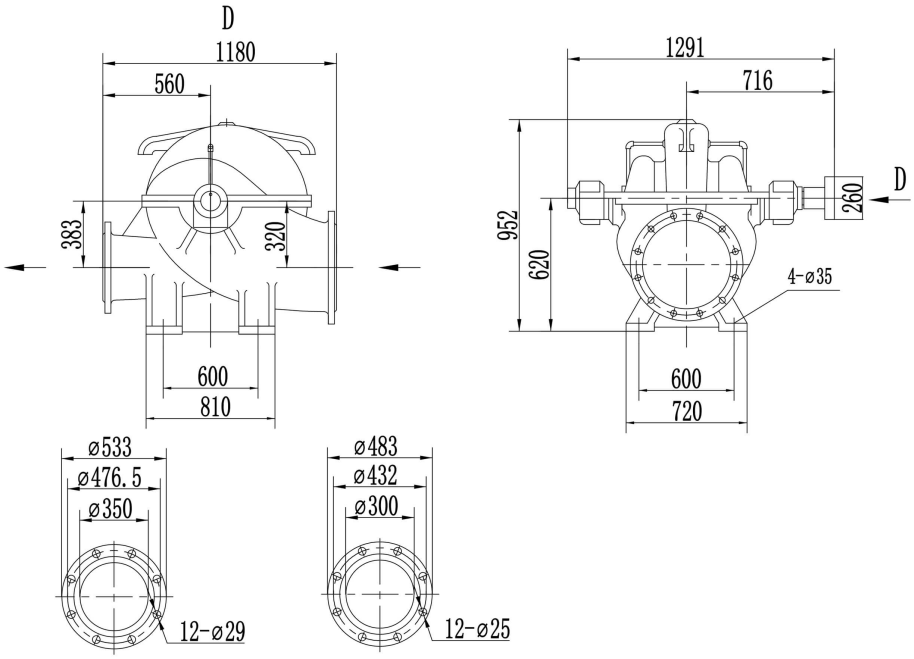

Inlet (ANSI 125 flange)		Outlet (ANSI 125 flange)		Impeller Diameter
mm	In.	mm	In.	In.
350	14	300	12	16.1

Project	Project ID	Created by	Created on	Last update

Performance Curves

Split Case Pump - 350GQS-44

Revision no.

Page: 2

	Receiver	From
Company name		
Respons. Department		
Person in charge		
Phone number		
Fax no		
E-mail address		

Pump Model	Capacity		Head		NPSH		Shaft power		Efficiency of duty point	Rotary speed
	m^3/h	GPM	m	Ft.	m	Ft.	kW	HP	%	RPM
350GQS-44	1166-1750	5134-7705	72-53	236-174	6.5	21.3	355	450	80	1780

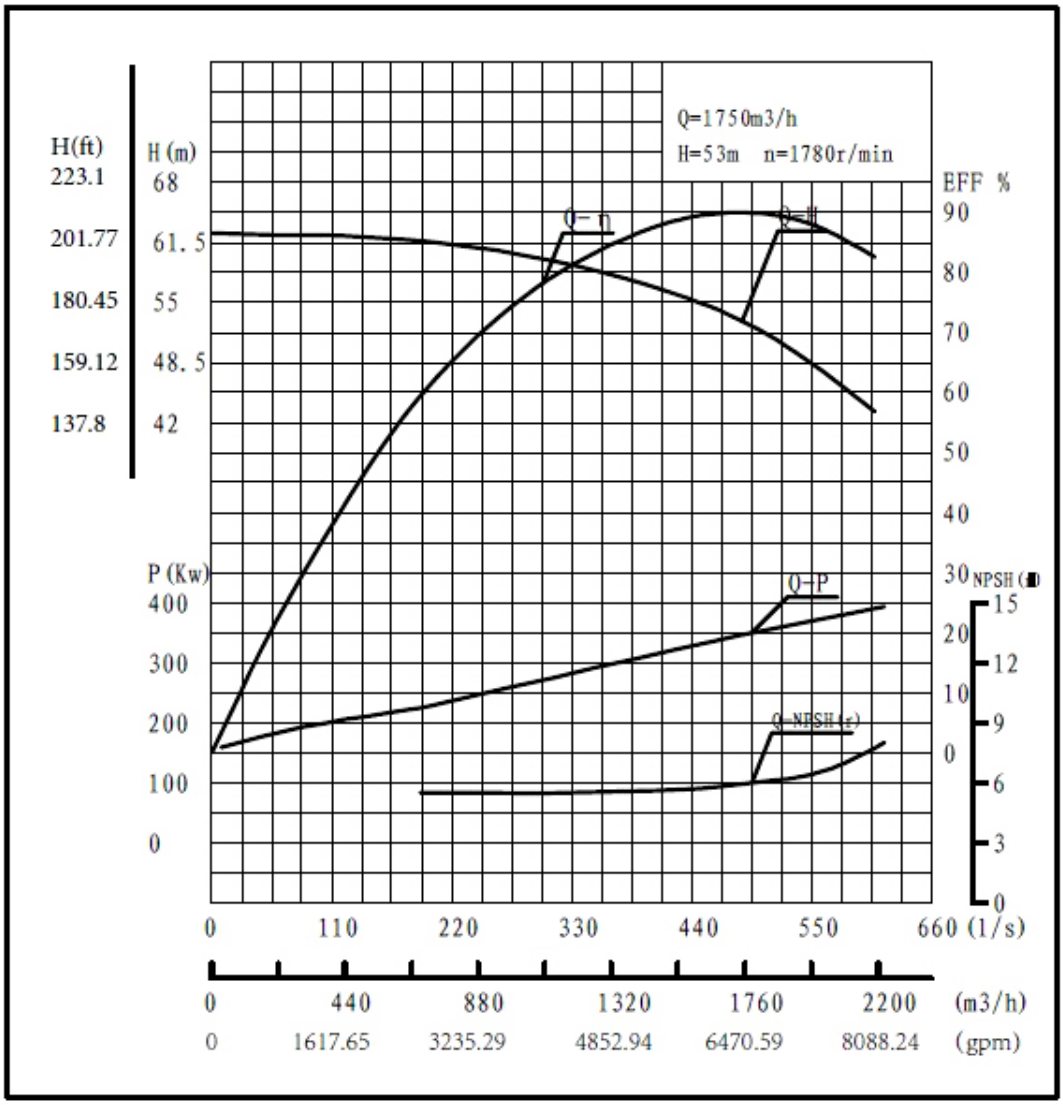

Project	Project ID	Created by	Created on	Last update

	Receiver	From
Company name		
Respons. Department		
Person in charge		
Phone number		
Fax no		
E-mail address		

- **Impeller:** SS304.
- **Shaft:** SS316.
- **Sleeves:** 3Cr13.
- **Pump Casing:** HT250.
- **Other Wet End Parts:** Stainless Steel.
- **Bearing:** SKF.
- **Bolts, Screws, Studs, Nuts, Washers... etc:** EN X20Cr13 (AISI 420).

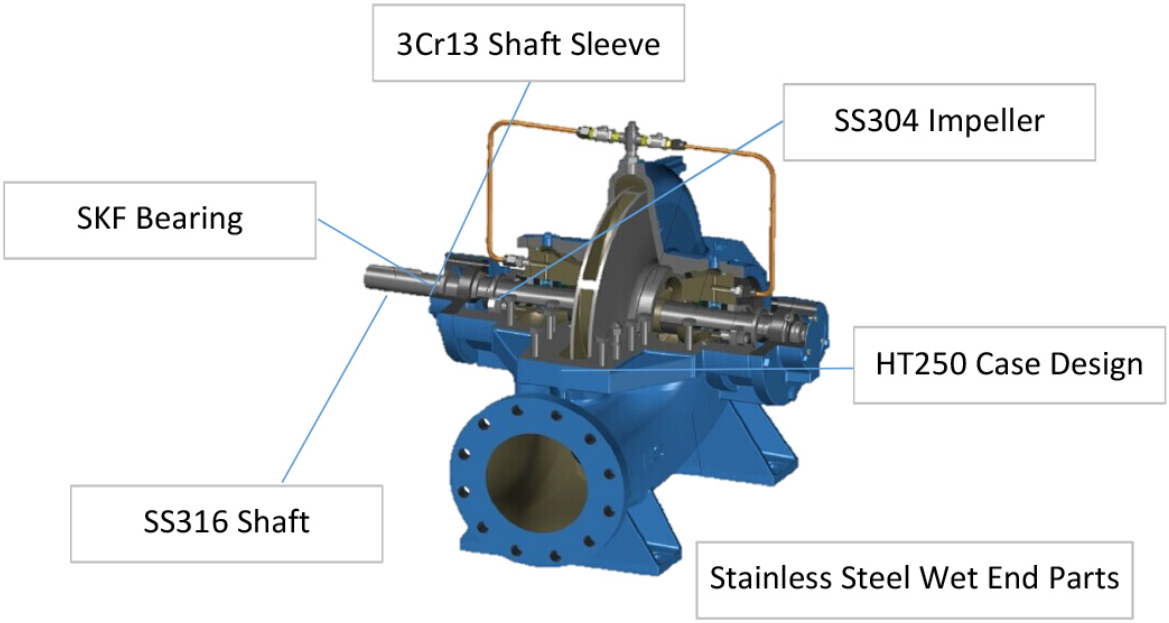

Project	Project ID	Created by	Created on	Last update