| | Technical Data<br>Split Case Pump - 250GQS-14 | Revision no. | Page:<br>1 |
|---|---|---|---|

| | Receiver | From |
|---|---|---|
| Company name | | |
| Respons. Department | | |
| Person in charge | | |
| Phone number | | |
| Fax no | | |
| E-mail address | | |

## Brand: Gol Pumps
## Model: 250GQS-14

## Features:

- **Double Suction Pump:** Large Volume High Pressure Water Pump.
- **Bearing:** First Level SKF.
- **Shaft Seal:** Bergman SiC SS316 NBR machine seal, easy to use and long use life.
- **Motor Selection:** Can be match with different brand motors.
- **Quality Traceability:** With Materials MTC and related GQC&QA record.

## Dimensions (mm):

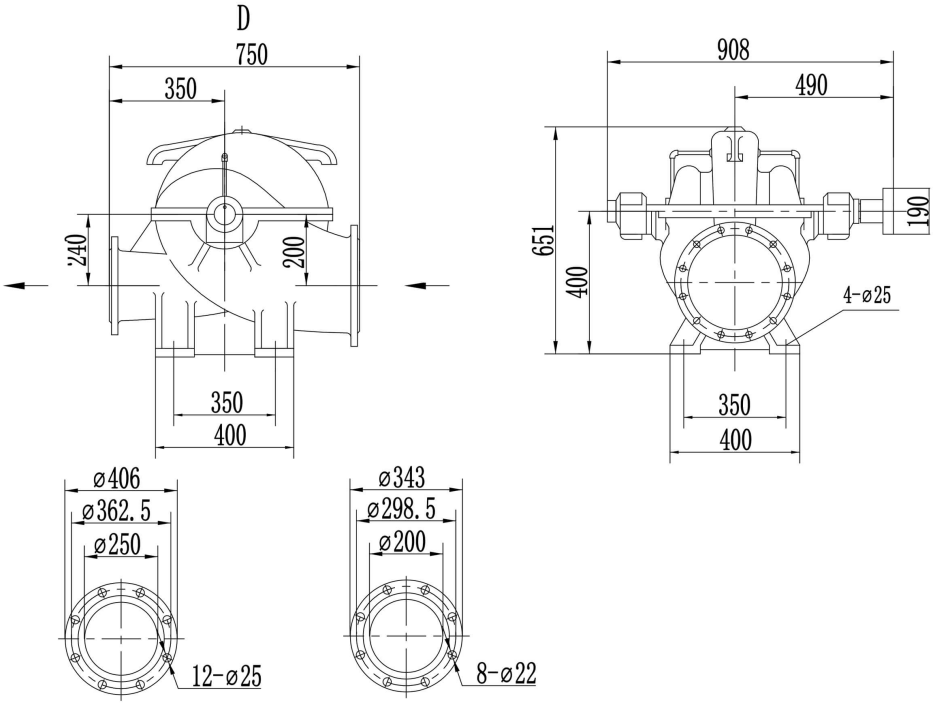


| Inlet (ANSI 125 flange) | | Outlet (ANSI 125 flange) | | Impeller Diameter |
|---|---|---|---|---|
| mm | In. | mm | In. | In. |
| 250 | 10 | 200 | 8 | 9.7 |

| Project | Project ID | Created by | Created on | Last update |
|---|---|---|---|---|
| | | | | |

# Performance Curves

## Split Case Pump - 250GQS-14

Revision no.

Page: 2

| | Receiver | From |
|---|---|---|
| Company name | | |
| Respons. Department | | |
| Person in charge | | |
| Phone number | | |
| Fax no | | |
| E-mail address | | |

| Pump Model | Capacity | | Head | | NPSH | | Shaft power | | Efficiency of duty point | Rotary speed |
|---|---|---|---|---|---|---|---|---|---|---|
| | $m^3/h$ | GPM | m | Ft. | m | Ft. | kW | HP | % | RPM |
| **250GQS-14** | 430-390 | 1893-1717 | 25-16 | 82-52 | 6.5 | 21.3 | 45 | 60 | 80 | 1780 |

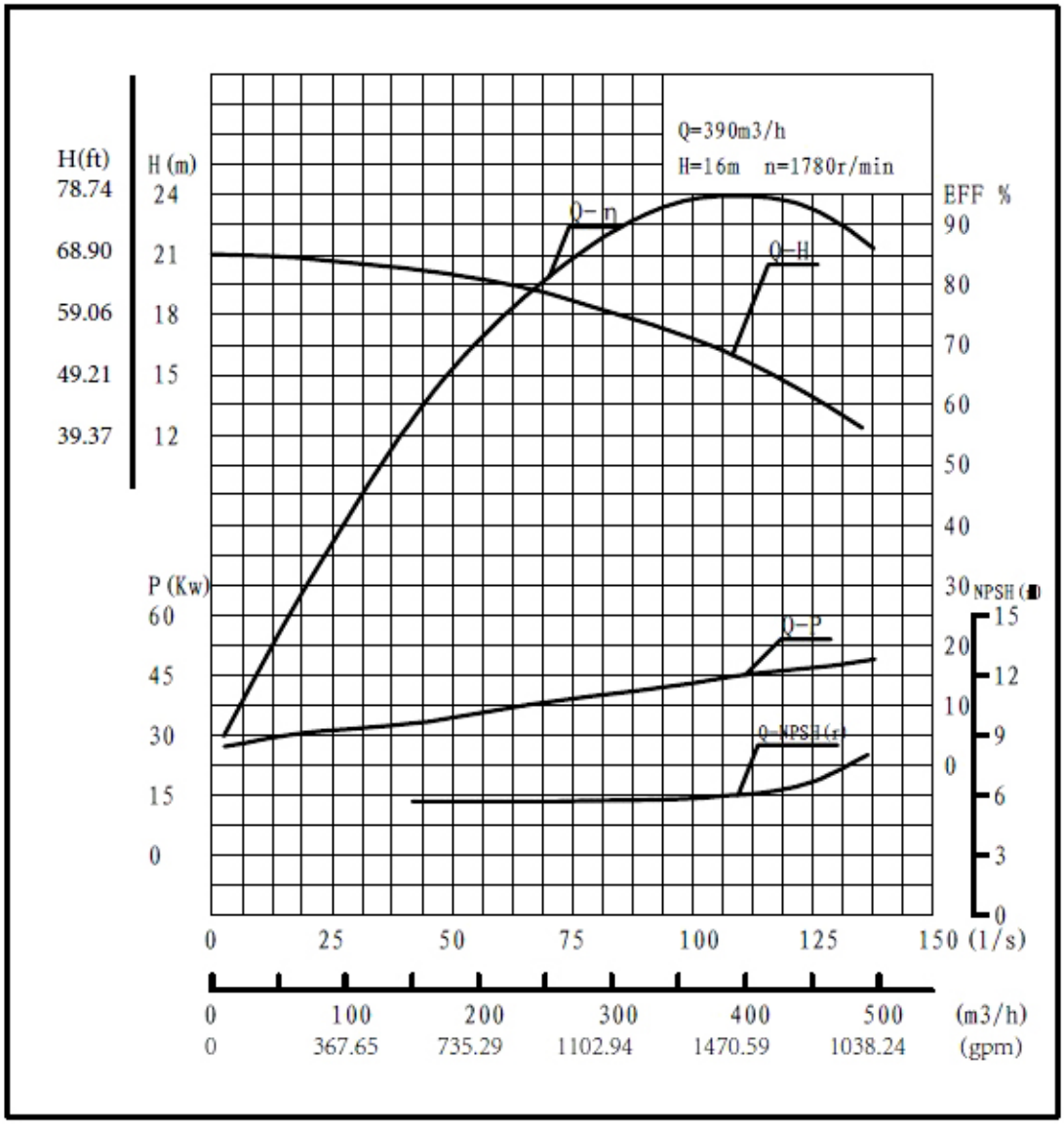


| Project | Project ID | Created by | Created on | Last update |
|---|---|---|---|---|
| | | | | |

| | Receiver | From |
|---|---|---|
| Company name | | |
| Respons. Department | | |
| Person in charge | | |
| Phone number | | |
| Fax no | | |
| E-mail address | | |

- **Impeller:** SS304.
- **Shaft:** SS316.
- **Sleeves:** 3Cr13.
- **Pump Casing:** HT250.
- **Other Wet End Parts:** Stainless Steel.
- **Bearing:** SKF.
- **Bolts, Screws, Studs, Nuts, Washers... etc:** EN X20Cr13 (AISI 420).

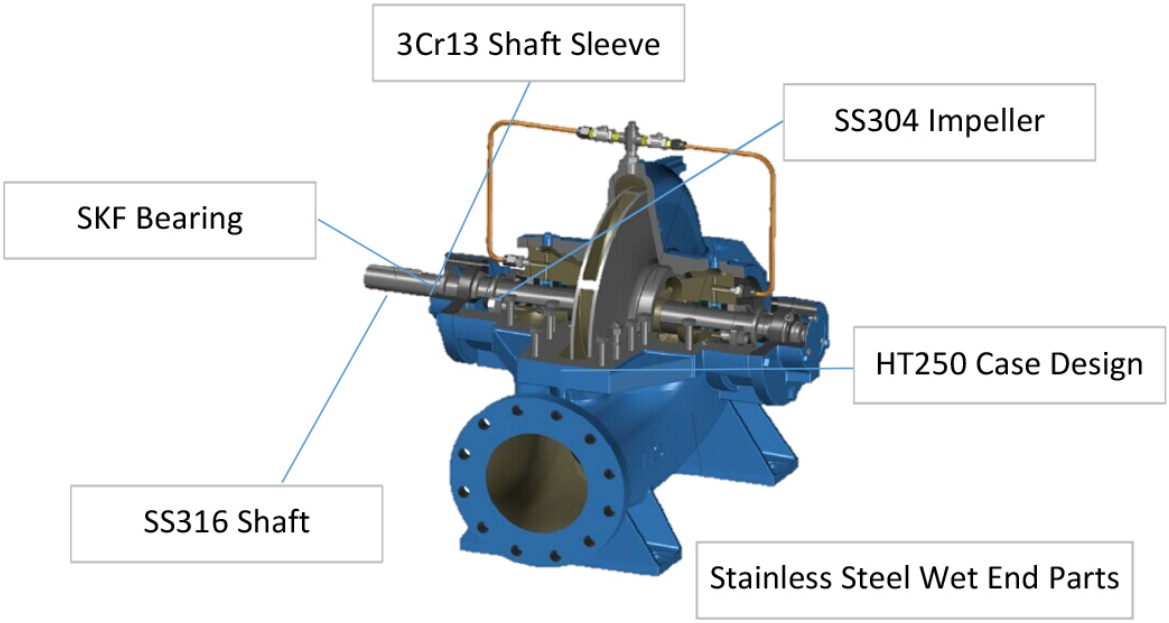




Gol Pumps Technology Inc. - 6520 NW 77th CT Miami, FL 33166 United States - Tel. (+1)786 615 8984 - Fax (+1)786 615 7043 - www.golpumps.us - Modification without advise!