	Technical Data Submersible Pump - GST 35-43	Revision no.	Page: 1

	Receiver	From
Company name		
Respons. Department		
Person in charge		
Phone number		
Fax no		
E-mail address		

Brand: Gol Pumps
Model: GST 35-43

Weight (lb)		
Pump	Motor	Pump + Motor
33.4	74.4	107.8

Cable	
Length (Ft)	AWG
11.5	4x14

Dimensions:

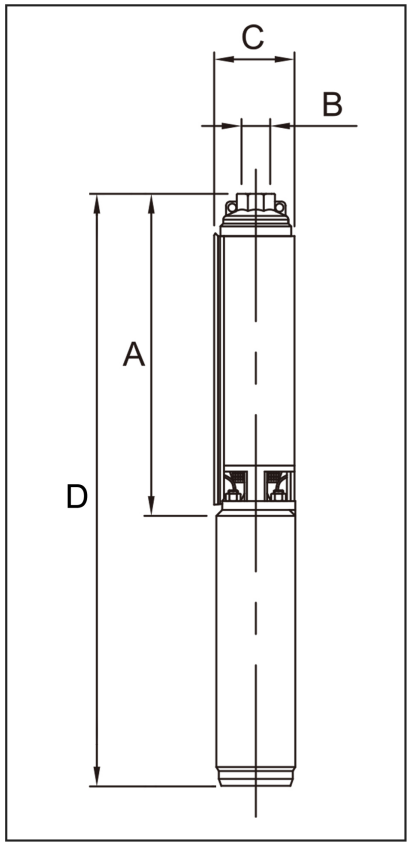

Outlet	Motor Dia.	Dimensions (inch)			
		A	B	C	D
NPT 2"	4"	66"	2"	3.9"	96.1"

Project	Project ID	Created by	Created on	Last update

Performance Curves

Submersible Pump - GST 35-43

Revision no.	Page:
	2

	Receiver	From
Company name		
Respons. Department		
Person in charge		
Phone number		
Fax no		
E-mail address		

Pump Model	Motor		Q Capacity 3500RPM										
			Gal/Min	0	15.9	18.5	21.2	23.8	26.4	31.7	37	42.3	47.6
	kW	HP	Head in Feet	1293	1112	1076	1040	1001	958	856.3	721.8	547.9	295.3
GST 35-43	7.5	10											

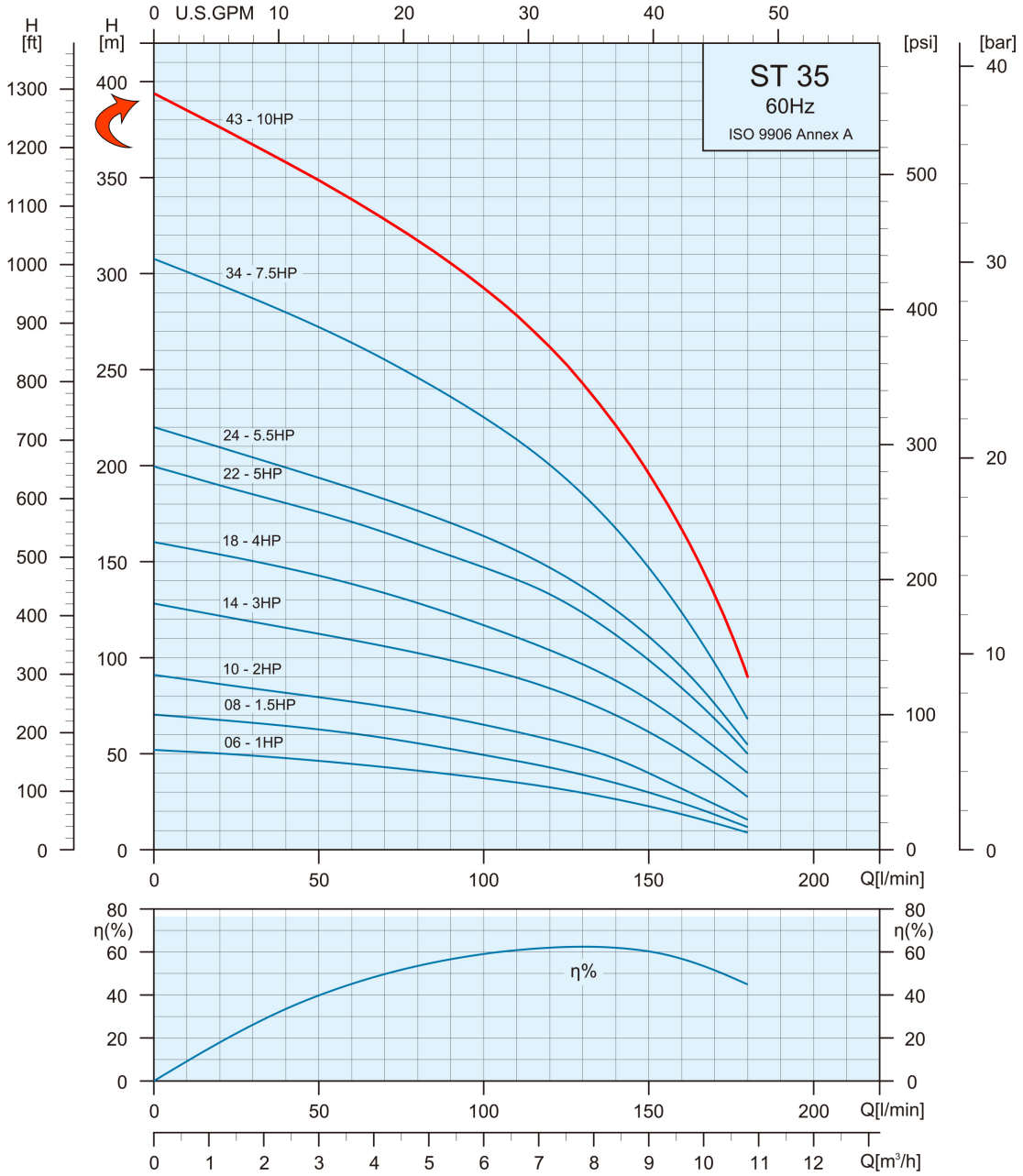

Project	Project ID	Created by	Created on	Last update

Part List and Materials

Submersible Pump - GST 35-43

Revision no.

	Receiver	From
Company name		
Respons. Department		
Person in charge		
Phone number		
Fax no		
E-mail address		

Motor Model	P2		S.F	Voltage	Phase	In	Istart	Imax	Cos ϕ	EFF %	Ts/Tn	Starting torque NM	RPM	Thrust
	kW	HP		V	PH	A	A	A						N
4WP 1000T	7.5	10	1.15	230	Three	38.1	177	43.3	0.72	74	2.9	60.6	**3490**	6500

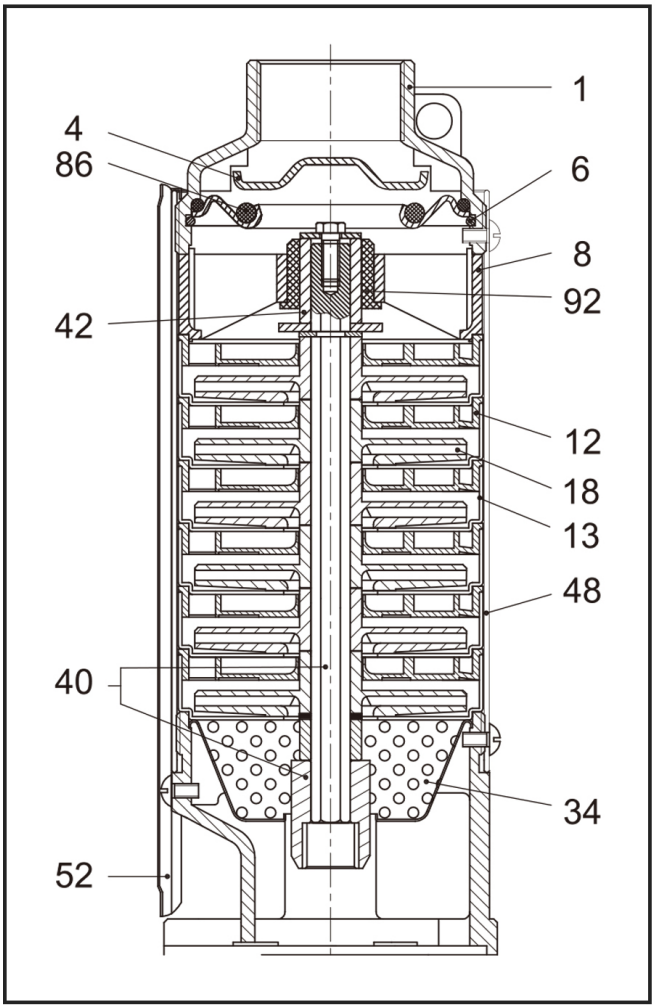

No.	Part Name	Materials
1	Discharge Head	AISI 304
4	Check Valve Cone	AISI 304
6	Check Valve Retaining Ring	AISI 304
8	Bearing Spider	Glass Filled Polycarbonate
12	Diffuser	Glass Filled Polycarbonate
13	Bowl	AISI 304
18	Impeller	Noryl
34	Strainer	AISI 304
40	Pump Shaft / Coupling	AISI 304
42	Shaft Sleeve	AISI 304 or Norly
48	Pump Casing	AISI 304
52	Cable Guard	AISI 304
86	O-Ring	NBR
92	Bearing	Polyacetal

Project	Project ID	Created by	Created on	Last update