	Technical Data Submersible Pump - GST 07-34	Revision no.	Page: 1

	Receiver	From
Company name		
Respons. Department		
Person in charge		
Phone number		
Fax no		
E-mail address		

Brand: Gol Pumps
Model: GST 07-34

Weight (lb)		
Pump	Motor	Pump + Motor
20.5	32.8	53.3

Cable	
Length (Ft)	AWG
8.2	14

Dimensions:

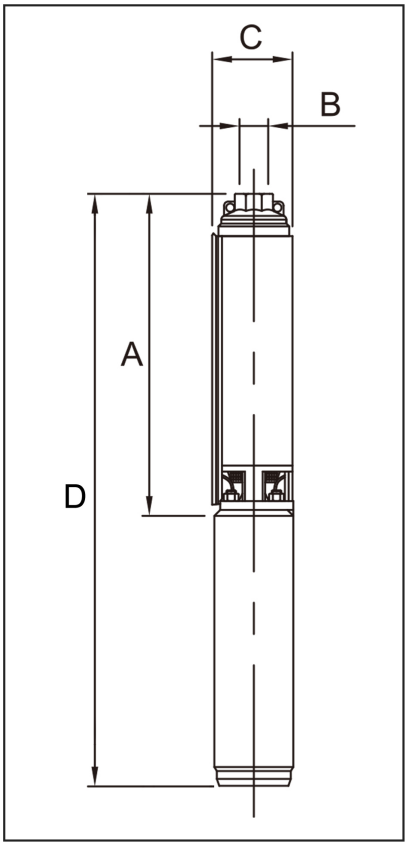

Outlet	Motor Dia.	Dimensions (inch)			
		A	B	C	D
NPT 1 1/4"	4"	33.8"	1 1/4"	3.9"	49.4"

Project	Project ID	Created by	Created on	Last update

Performance Curves

Submersible Pump - GST 07-34

Revision no.	Page:
	2

	Receiver	From
Company name		
Respons. Department		
Person in charge		
Phone number		
Fax no		
E-mail address		

Pump Model	Motor		Q Capacity 3500RPM								
			Gal/Min	0	4	5.3	6.6	7.9	9.2	10.6	13.2
	kW	HP	Head in Feet	1043	944.9	882.5	810.4	731.6	643	547.9	311.7
GST 07-34	2.2	3									

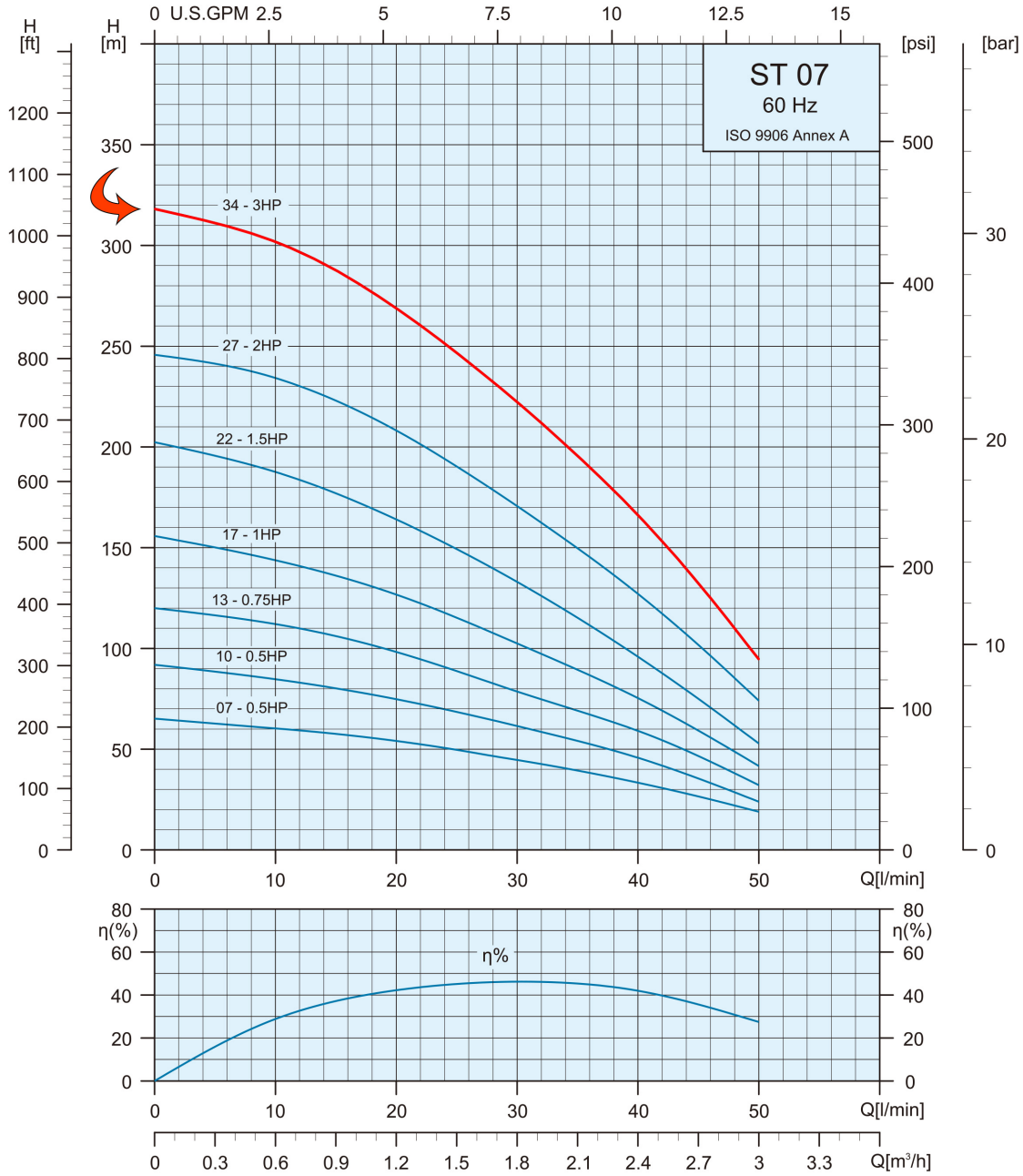

Project	Project ID	Created by	Created on	Last update

Part List and Materials

Submersible Pump - GST 07-34

Revision no.

	Receiver	From
Company name		
Respons. Department		
Person in charge		
Phone number		
Fax no		
E-mail address		

Motor Model	P2		S.F	Voltage	Phase	In	Imax	Istart	PF (%)		Efficiency (%)		RPM	Thrust
	kW	HP		V	PH	A	A	A	Allowable Load	Overload Factor	Allowable Load	Overload Factor		N
4CS4356	2.2	3	1.15	460	Three	4.9	5.4	28.8	0.74	0.77	75.7	76.1	3450	4000

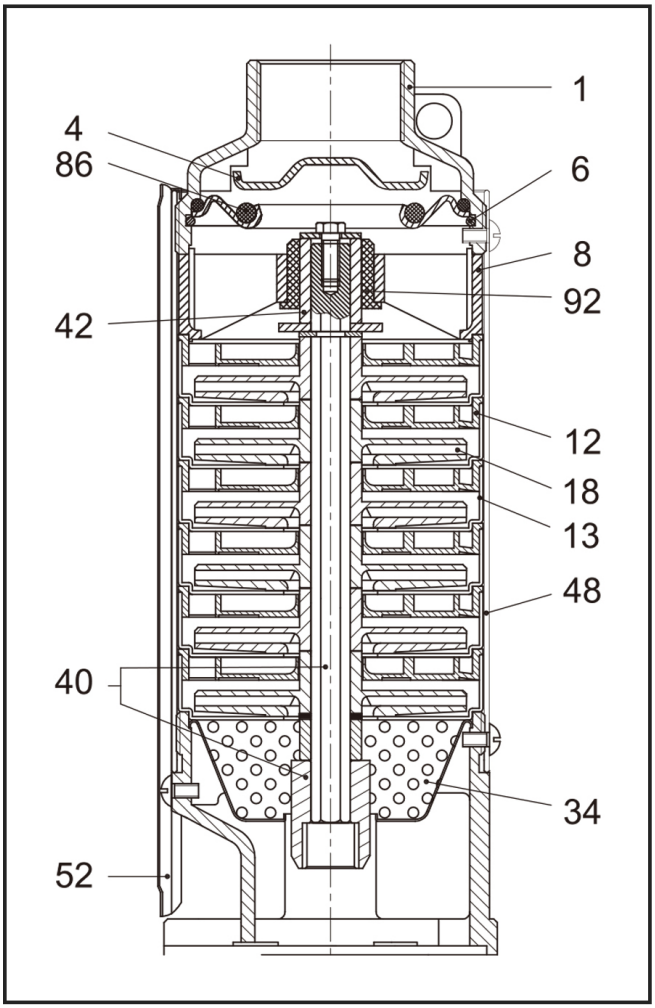

No.	Part Name	Materials
1	Discharge Head	AISI 304
4	Check Valve Cone	AISI 304
6	Check Valve Retaining Ring	AISI 304
8	Bearing Spider	Glass Filled Polycarbonate
12	Diffuser	Glass Filled Polycarbonate
13	Bowl	AISI 304
18	Impeller	Noryl
34	Strainer	AISI 304
40	Pump Shaft / Coupling	AISI 304
42	Shaft Sleeve	AISI 304 or Norly
48	Pump Casing	AISI 304
52	Cable Guard	AISI 304
86	O-Ring	NBR
92	Bearing	Polyacetal

Project	Project ID	Created by	Created on	Last update