	Technical Data Submersible Pump - GST 05-26	Revision no.	Page: 1

	Receiver	From
Company name		
Respons. Department		
Person in charge		
Phone number		
Fax no		
E-mail address		

Brand: Gol Pumps
Model: GST 05-26

Weight (lb)		
Pump	Motor	Pump + Motor
12.8	29.7	42.5

Cable	
Length (Ft)	AWG
3.9	14

Dimensions:

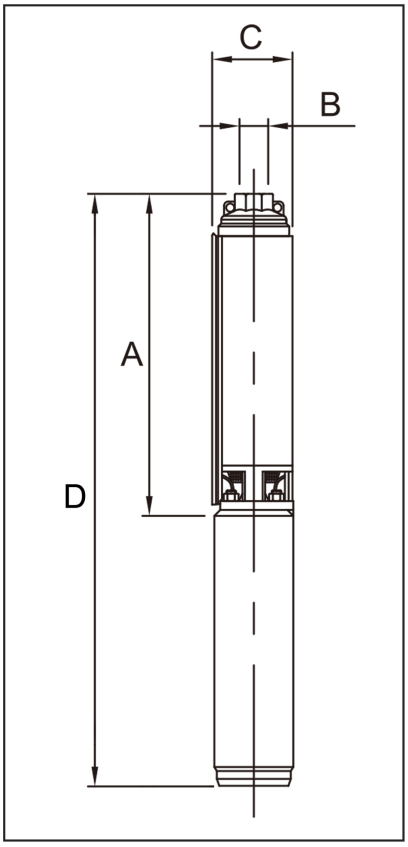

Outlet	Motor Dia.	Dimensions (inch)			
		A	B	C	D
NPT 1 1/4"	4"	25.3"	1 1/4"	3.9"	42"

Project	Project ID	Created by	Created on	Last update

Performance Curves
Submersible Pump - GST 05-26

Revision no.	Page:
	2

	Receiver	From
Company name		
Respons. Department		
Person in charge		
Phone number		
Fax no		
E-mail address		

Pump Model	Motor		Q Capacity 3450RPM						
	P2		G/Min	0	2.6	4	5.3	6.6	7.9
	kW	HP	Head in Feet	836.6	718.5	587.3	498.7	367.5	223.1
GST 05-26	1.1	1.5							

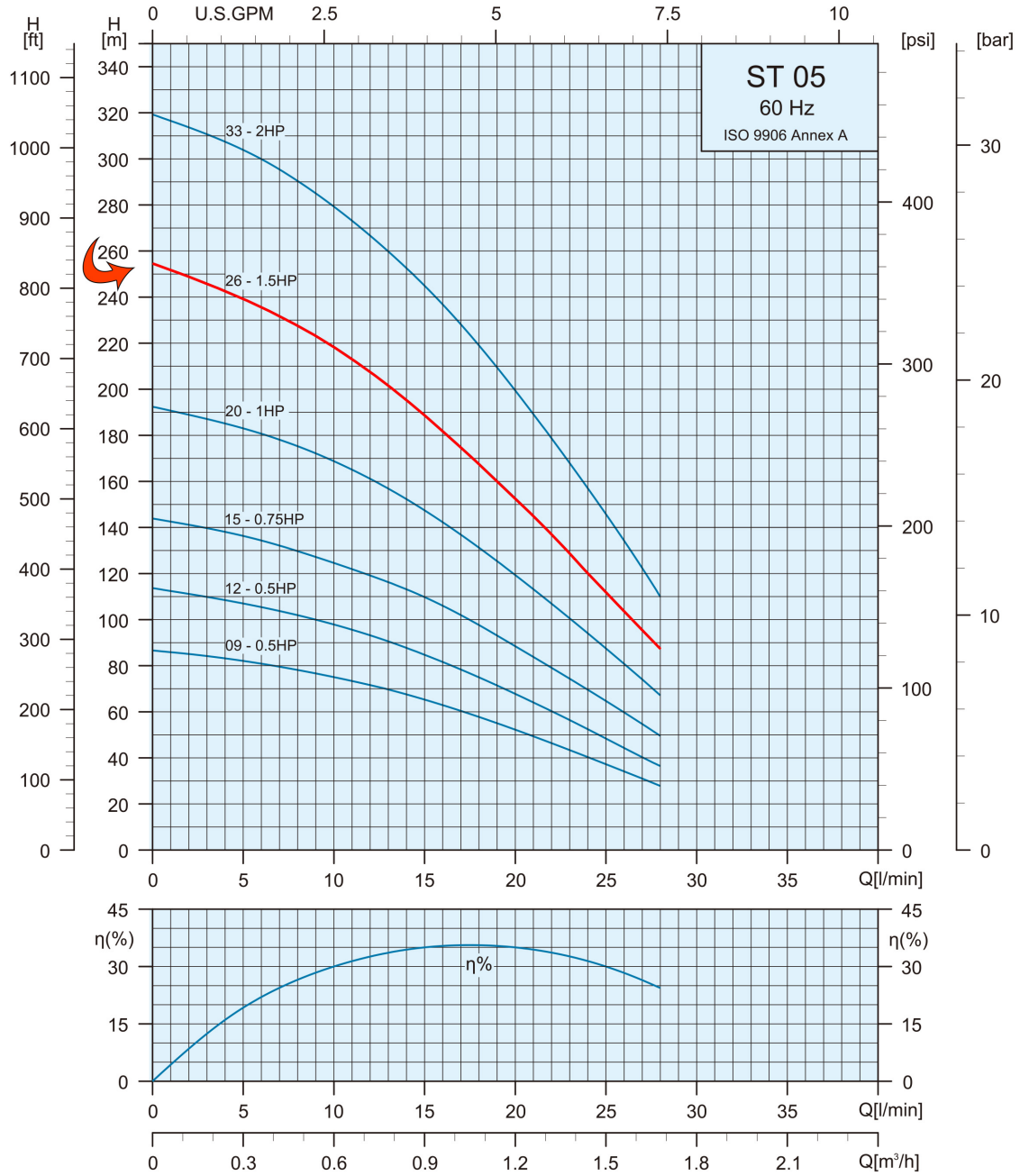

Project	Project ID	Created by	Created on	Last update

Part List and Materials

Submersible Pump - GST 05-26

Revision no.

	Receiver	From
Company name		
Respons. Department		
Person in charge		
Phone number		
Fax no		
E-mail address		

Motor Model	P2		S.F	Voltage	Phase	Wire	In	Imax	Istart	PF (%)		Efficiency (%)		RPM	Thrust	Capacitor
	kW	HP		V	PH		A	A	A	Allowable Load	Overload Factor	Allowable Load	Overload Factor		N	UF
4CS3536M	1.1	1.5	1.3	230	Single	2	7.7	9.4	31.8	0.95	0.96	64.3	64.8	3450	3000	30UF 450V

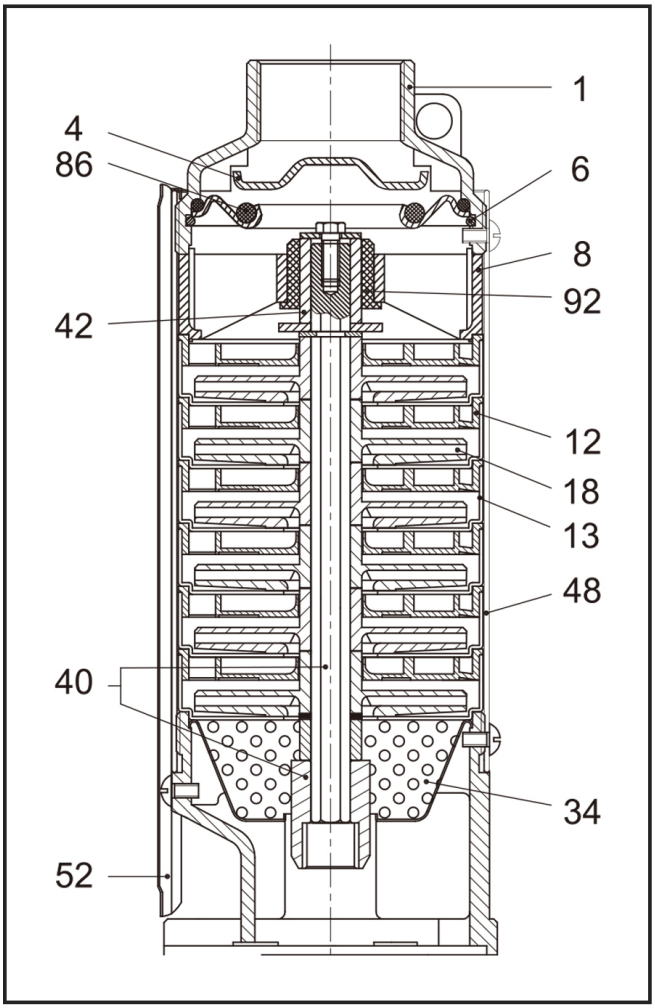

No.	Part Name	Materials
1	Discharge Head	AISI 304
4	Check Valve Cone	AISI 304
6	Check Valve Retaining Ring	AISI 304
8	Bearing Spider	Glass Filled Polycarbonate
12	Diffuser	Glass Filled Polycarbonate
13	Bowl	AISI 304
18	Impeller	Noryl
34	Strainer	AISI 304
40	Pump Shaft / Coupling	AISI 304
42	Shaft Sleeve	AISI 304 or Norly
48	Pump Casing	AISI 304
52	Cable Guard	AISI 304
86	O-Ring	NBR
92	Bearing	Polyacetal

Project	Project ID	Created by	Created on	Last update