| | Technical Data<br>Submersible Pump - GST 05-20 | Revision no. | Page:<br>1 |
|---|---|---|---|

| | Receiver | From |
|---|---|---|
| Company name | | |
| Respons. Department | | |
| Person in charge | | |
| Phone number | | |
| Fax no | | |
| E-mail address | | |

**Brand: Gol Pumps**
**Model: GST 05-20**

| Weight (lb) | | |
|---|---|---|
| Pump | Motor | Pump + Motor |
| 10.8 | 25.3 | 36.1 |

| Cable | |
|---|---|
| Length (Ft) | AWG |
| 3.9 | 14 |

## Dimensions:

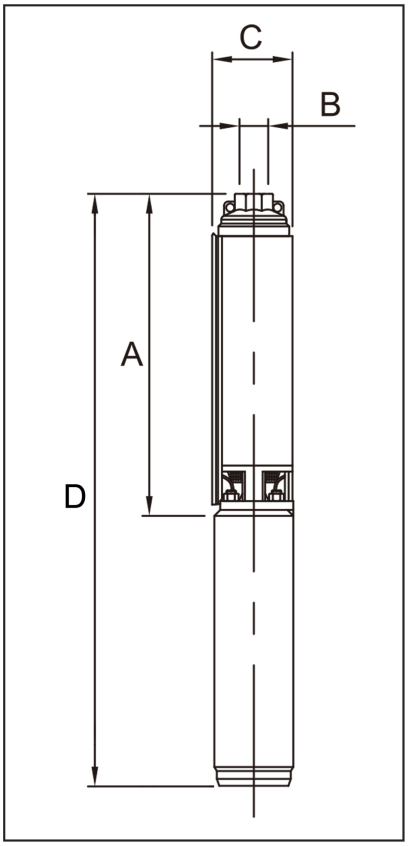


| Outlet | Motor Dia. | Dimensions (inch) | | | |
|---|---|---|---|---|---|
| | | A | B | C | D |
| NPT 1 1/4" | 4" | 19.6" | 1 1/4" | 3.9" | 34.5" |

| Project | Project ID | Created by | Created on | Last update |
|---|---|---|---|---|
| | | | | |

# Performance Curves
## Submersible Pump - GST 05-20

| Revision no. | Page: |
|---|---|
| | 2 |

| | Receiver | From |
|---|---|---|
| Company name | | |
| Respons. Department | | |
| Person in charge | | |
| Phone number | | |
| Fax no | | |
| E-mail address | | |

| Pump Model | Motor | | Q Capacity 3450RPM | | | | | | |
|---|---|---|---|---|---|---|---|---|---|
| | P2 | | G/Min | 0 | 2.6 | 4 | 5.3 | 6.6 | 7.9 |
| | kW | HP | Head in Feet | 633.2 | 554.5 | 485.6 | 393.7 | 288.7 | 173.9 |
| GST 05-20 | 0.75 | 1 | | | | | | | |

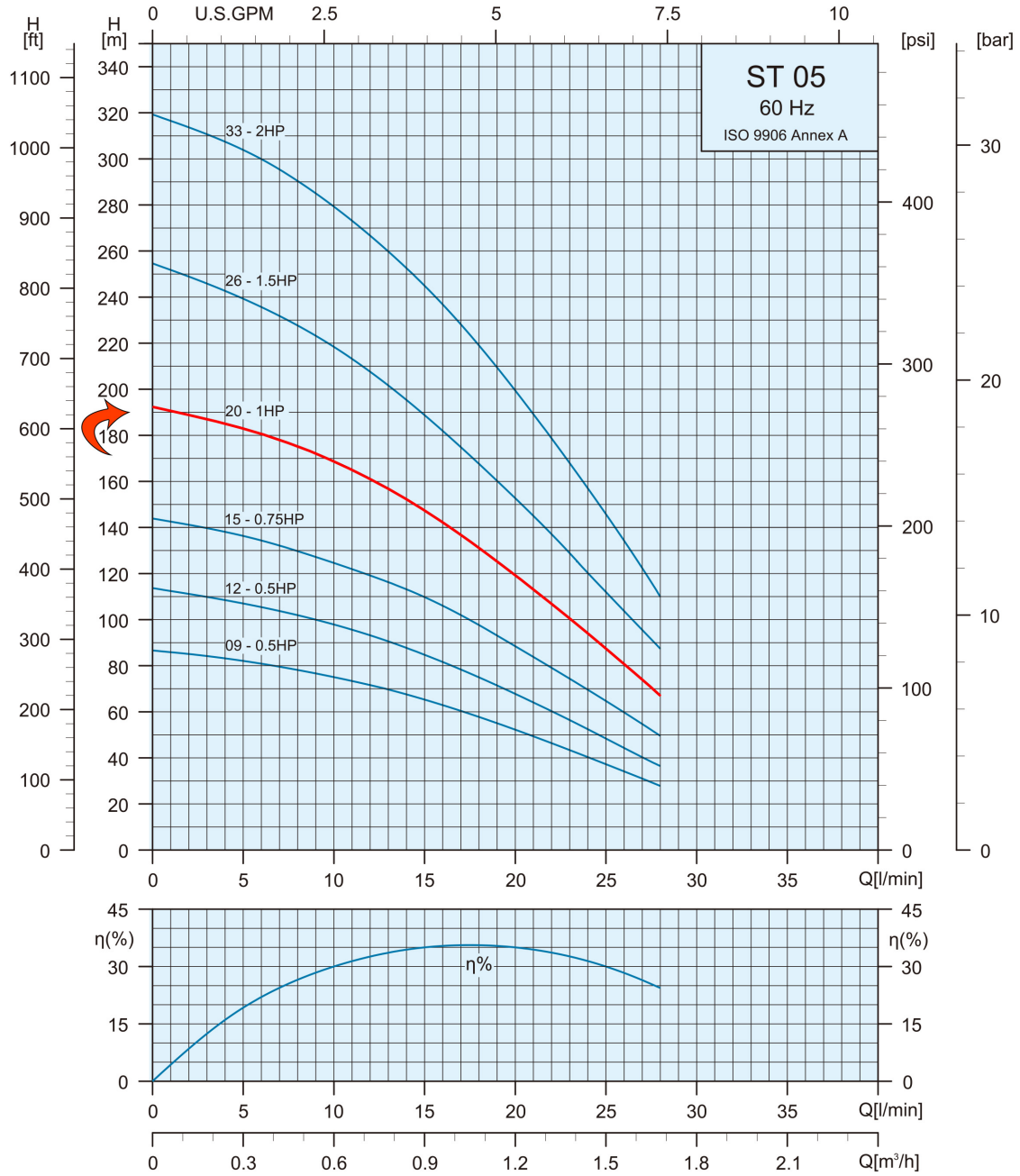


| Project | Project ID | Created by | Created on | Last update |
|---|---|---|---|---|
| | | | | |

# Part List and Materials

## Submersible Pump - GST 05-20

Revision no.

Page: 3

| | Receiver | From |
|---|---|---|
| Company name | | |
| Respons. Department | | |
| Person in charge | | |
| Phone number | | |
| Fax no | | |
| E-mail address | | |

| Motor Model | P2 | | S.F | Voltage | Phase | Wire | In | Imax | Istart | PF (%) | | Efficiency (%) | | RPM | Thrust | Capacitor |
|---|---|---|---|---|---|---|---|---|---|---|---|---|---|---|---|---|
| | kW | HP | | V | PH | | A | A | A | Allowable Load | Overload Factor | Allowable Load | Overload Factor | | N | UF |
| **4CS3526M** | 0.75 | 1 | 1.4 | 230 | Single | 2 | 5.4 | 6.8 | 24.2 | 0.97 | 0.98 | 62.7 | 68.2 | 3450 | 3000 | 25UF 450V |

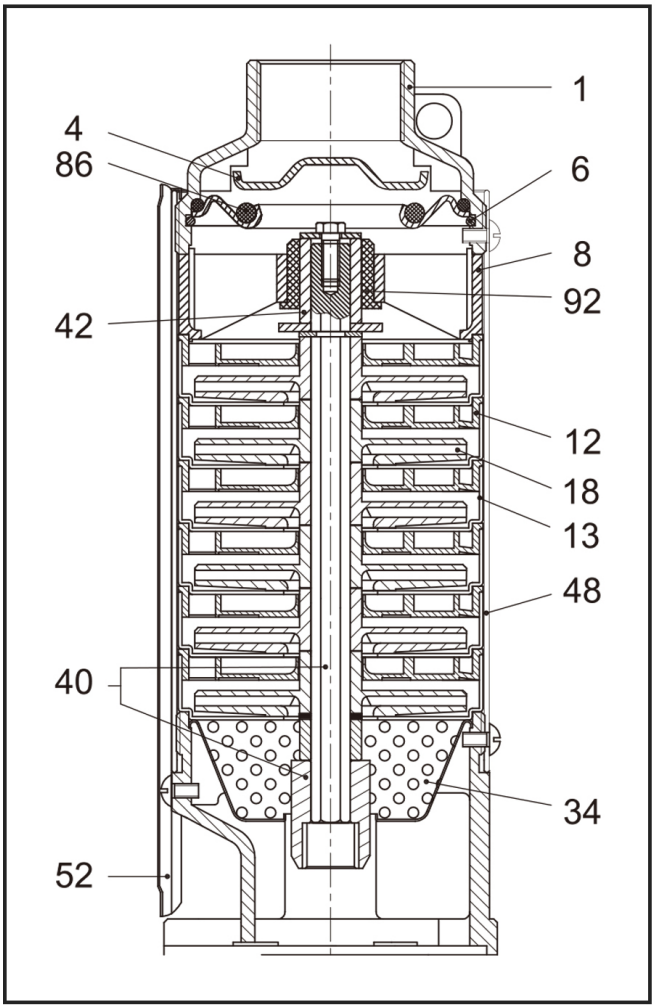


| No. | Part Name | Materials |
|---|---|---|
| 1 | Discharge Head | AISI 304 |
| 4 | Check Valve Cone | AISI 304 |
| 6 | Check Valve Retaining Ring | AISI 304 |
| 8 | Bearing Spider | Glass Filled Polycarbonate |
| 12 | Diffuser | Glass Filled Polycarbonate |
| 13 | Bowl | AISI 304 |
| 18 | Impeller | Noryl |
| 34 | Strainer | AISI 304 |
| 40 | Pump Shaft / Coupling | AISI 304 |
| 42 | Shaft Sleeve | AISI 304 or Norly |
| 48 | Pump Casing | AISI 304 |
| 52 | Cable Guard | AISI 304 |
| 86 | O-Ring | NBR |
| 92 | Bearing | Polyacetal |

| Project | Project ID | Created by | Created on | Last update |
|---|---|---|---|---|
| | | | | |