	Technical Data Submersible Pump - GSP 40-7	Revision no.	Page: 1

	Receiver	From
Company name		
Respons. Department		
Person in charge		
Phone number		
Fax no		
E-mail address		

Brand: Gol Pumps
Model: GSP 40-7

Weight (lb)		
Pump	Motor	Pump + Motor
11.7	29	40.7

Cable	
Length (Ft)	AWG
3.9	14

Dimensions:

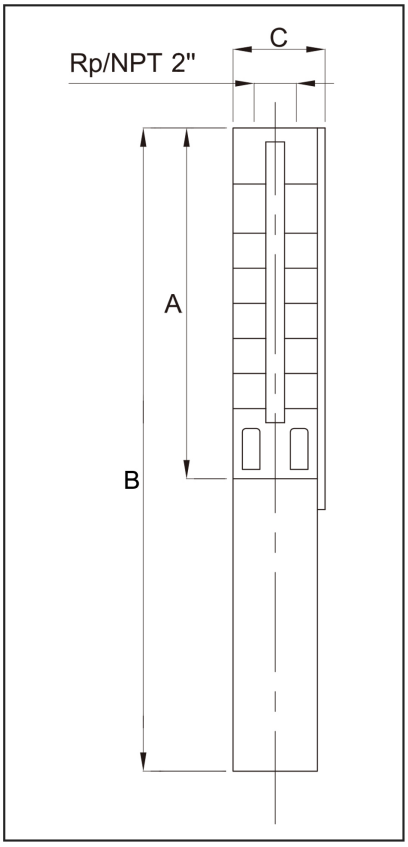

Outlet	Motor Dia.	Dimensions (inch)		
		A	B	C
NPT 2"	4"	19.5"	33.4"	3.9"

Project	Project ID	Created by	Created on	Last update

	Performance Curves Submersible Pump - GSP 40-7	Revision no.	Page: 2

	Receiver	From
Company name		
Respons. Department		
Person in charge		
Phone number		
Fax no		
E-mail address		

Pump Model	Motor		Q Capacity 3450RPM									
	P2		G/Min	0	21.1	23.8	26.4	31.7	37	42.3	47.6	52.8
	kW	HP	Head in Feet	193.6	167.3	164	160.8	154.2	147.6	137.8	121.4	101.7
GSP 40-7	1.5	2										

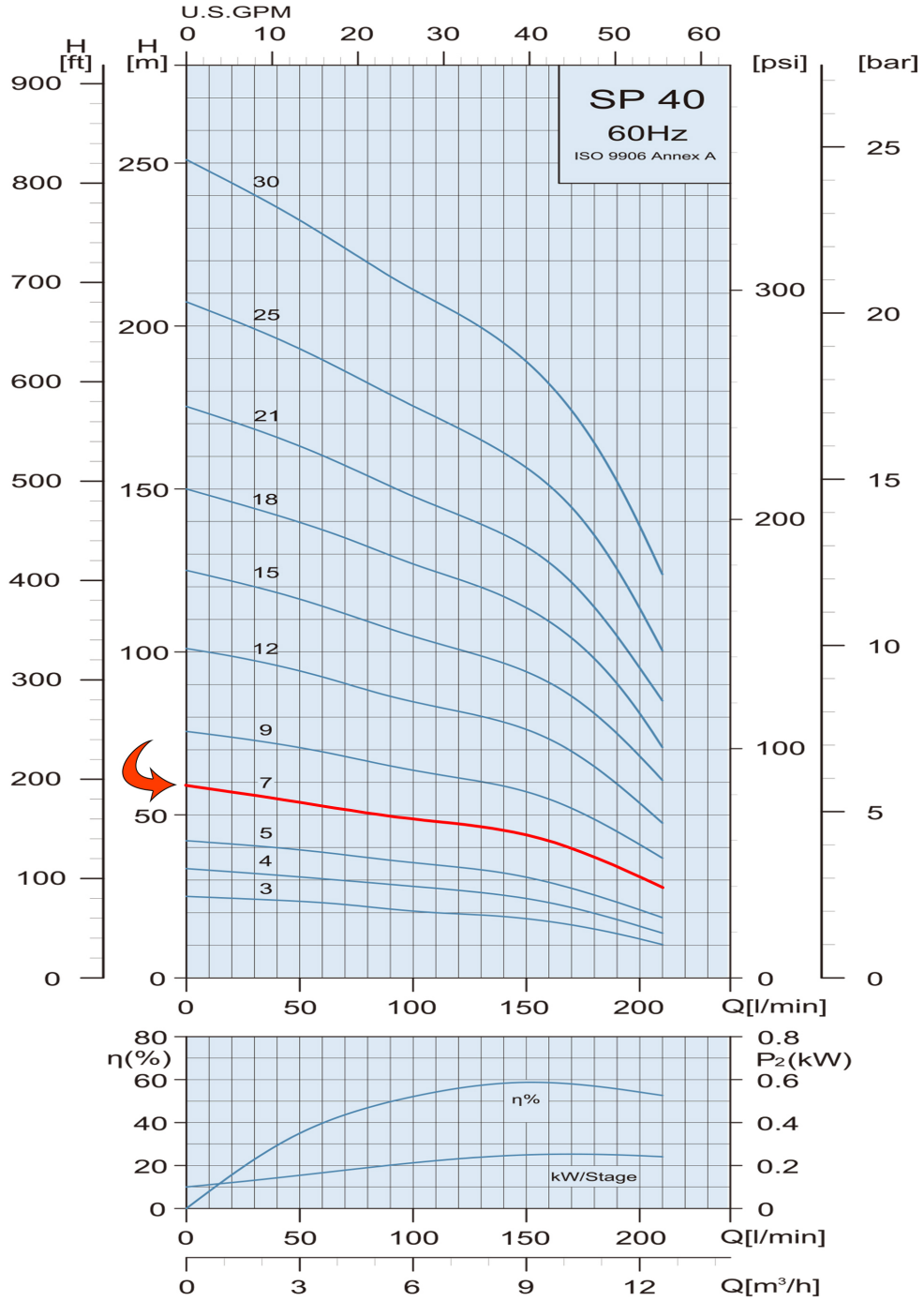

Project	Project ID	Created by	Created on	Last update

Part List and Materials

Submersible Pump - GSP 40-7

Revision no.

Page: 3

	Receiver	From
Company name		
Respons. Department		
Person in charge		
Phone number		
Fax no		
E-mail address		

Motor Model	P2		S.F	Voltage	Phase	In	Imax	Istart	PF (%)		Efficiency (%)		RPM	Thrust
	kW	HP		V	PH	A	A	A	Allowable Load	Overload Factor	Allowable Load	Overload Factor		N
4CS3946	1.5	2	1.25	230	Three	6.5	7.5	34.1	0.76	0.81	76.3	76.2	3450	3000

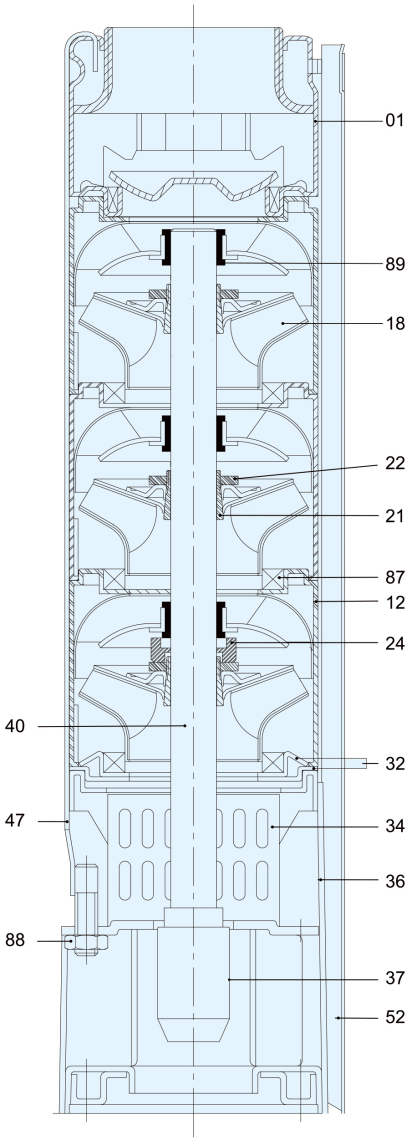

Pos.	Part Name	Materials
01	Discharge	AISI 304
12	Diffuser	AISI 304
18	Impeller	AISI 304
21	Split Cone	AISI 304
22	Split Cone Nut	AISI 304
24	Stop Ring	Carbon + Graphite + PTFE
32	Neck Ring Retainer	AISI 304
34	Strainer	AISI 304
36	Suction Interconnector	AISI 304
37	Coupling	AISI 304
40	Pump Shaft	AISI 304
47	Strap	AISI 304
52	Cable Guard	AISI 304
87	Neck Ring	AISI 304 + NBR
88	Nut	AISI 304
89	Bearing	NBR

Project	Project ID	Created by	Created on	Last update