	Technical Data Horizontal Centrifugal Slurry Pump - GAZ150-1-C42	Revision no.	Page: 1

	Receiver	From
Company name		
Respons. Department		
Person in charge		
Phone number		
Fax no		
E-mail address		

Brand: Gol Pumps
Model: GAZ150-1-C42

Dimensions:

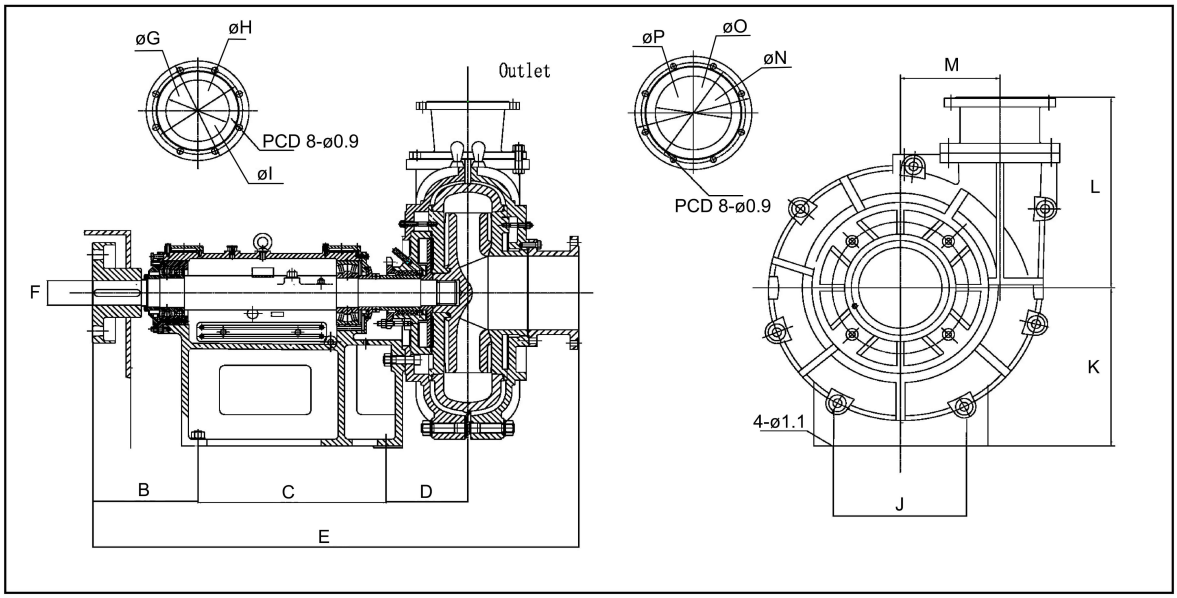

Flange (inch)	
Inlet	Outlet
8	8

Pump Installation Size (inch)														
B	C	D	E	F	G	H	I	J	K	L	M	N	O	P
10.9	16.5	12.5	53	2.6	7.9	11.6	13.2	15.7	16.1	22.8	11.8	13.2	11.6	7.9

Project	Project ID	Created by	Created on	Last update

Performance Curve
Horizontal Centrifugal Slurry Pump - GAZ150-1-C42

Revision no.	Page:
	2

	Receiver	From
Company name		
Respons. Department		
Person in charge		
Phone number		
Fax no		
E-mail address		

Model	Inlet	Outlet	Power		Max. Solid Passing	Revolutions
	in	in	hp	kw	in	rpm
GAZ150-1-C42	8	8	175	132	2.7	1750

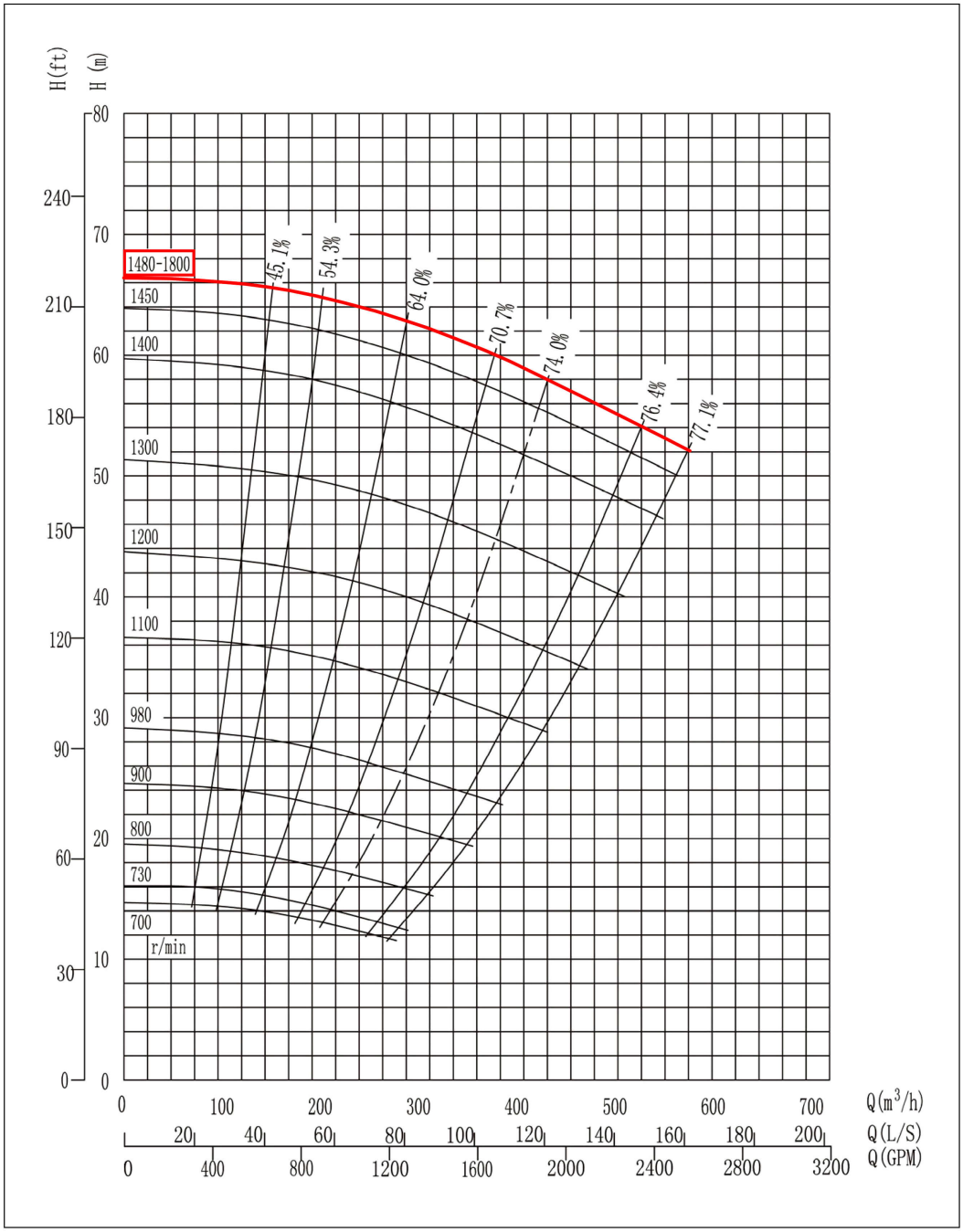

Project	Project ID	Created by	Created on	Last update

Pump and Motor
Horizontal Centrifugal Slurry Pump - GAZ150-1-C42

Revision no.

	Receiver	From
Company name		
Respons. Department		
Person in charge		
Phone number		
Fax no		
E-mail address		

Motor Type		TEFC
Nominal Voltage	V	460 - 3ph
Power Factor		0.85
Stator Current	A	203
Motor Power	HP	175
Frequency	HZ	60
Efficiency	%	96.2
Speed	RPM	1792
Protection Class	IP	55
Approx. Weight	LB	2640
Manufacturer		WEG

Project	Project ID	Created by	Created on	Last update

Parts and Materials
Horizontal Centrifugal Slurry Pump - GAZ150-1-C42

Revision no.

	Receiver	From
Company name		
Respons. Department		
Person in charge		
Phone number		
Fax no		
E-mail address		

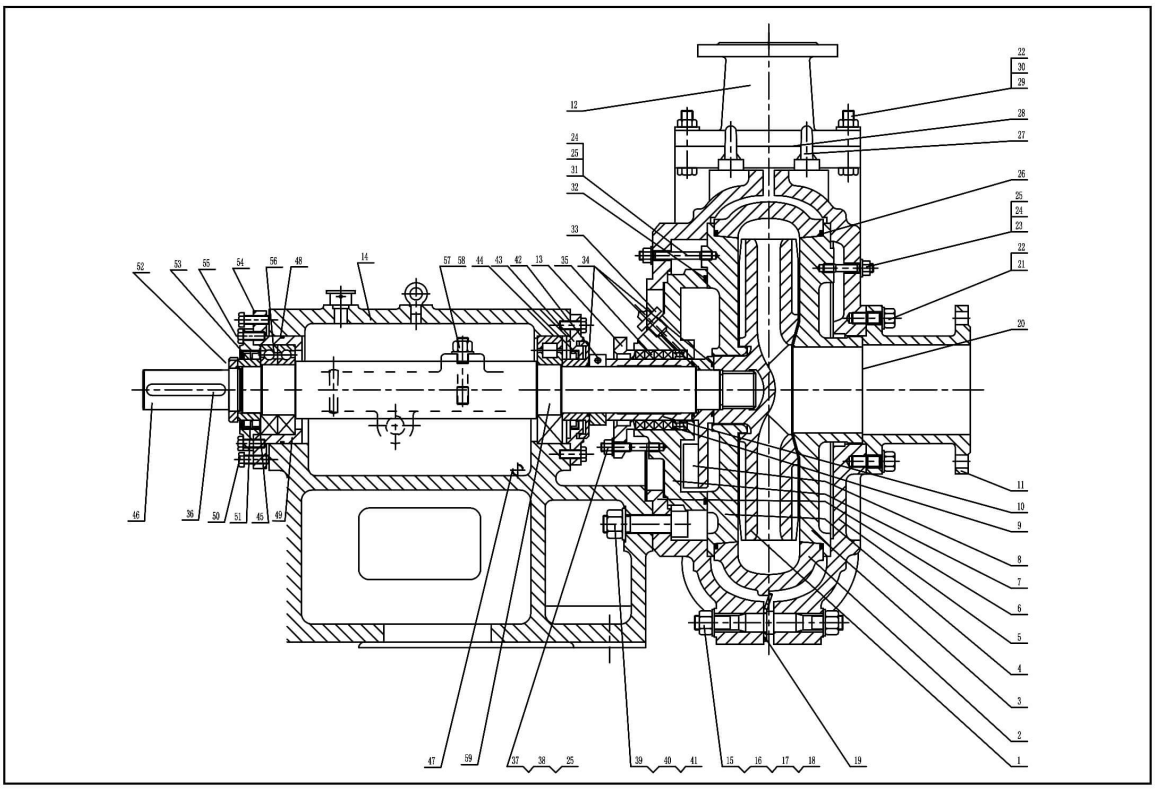

Item	Parts Name	Qty	Material
1	Impeller	1	Cr27MoNi
2	Volute Liner	1	Cr27MoNi
3	Throat Bush	1	Cr27MoNi
4	FPL Insert	1	Cr27MoNi
5	Cover Plate	1	HT200
6	Frame Plate	1	HT200
7	Stuffing Box	1	Cr27MoNi
8	Expeller	1	Cr27MoNi
9	Lantern Ring	1	
10	Shaft Sleeve	1	3Cr13
11	Intake Coupling	1	
12	Discharge Coupling	1	
13	Stuffing Gland	1	HT200
14	Frame	1 set	
15	Frame Plate Bolts A	2	
16	Frame Plate Bolts B	4	
17	Nuts	19	
18	Washers	19	
19	Cotter	2	
20	Intake Joint Ring	1	Rubber
21	Intake Studs	12	
22	Washers	14	
23	Cover Plate Studs	4	
24	Nuts	8	
25	Washers	8	
26	Seal Ring	2	Rubber
27	Eyebolts	2	
28	Discharge Joint Ring	1	Rubber
29	Discharge Bolts	8	
30	Nuts	8	
31	FPL Insert Studs	4	

Project	Project ID	Created by	Created on	Last update

Parts and Materials
Horizontal Centrifugal Slurry Pump - GAZ150-1-C42

Revision no.

	Receiver	From
Company name		
Respons. Department		
Person in charge		
Phone number		
Fax no		
E-mail address		

Item	Parts Name	Qty	Material
32	Seal Ring	1	Rubber
33	Nipple	1	
34	O Ring	3	Rubber
35	Packing	4	
36	Key	1	
37	Studs	2	
38	Nuts	2	
39	Nuts M24	3	
40	Washers M24	3	
41	Adjust Studs M24	3	
42	Release Collar	1	
43	End Cover	1	HT200
44	Oil Seal	1	
45	Papper Doily	1 set	0.2Fishpaper
46	Shaft	1	
47	Plug R1/2	1	
48	End Cover Seal Ring	1	Rubber
49	Bearing Box	1	
50	Bearing Box Bolts	16	
51	Oil Seal Driven	1	
52	Lock Nut	1	
53	Retainer	1	
54	End Cover Driven	1	
55	End Cover Bolts	8	
56	Bearing	2	
57	Frame Studs	6	
58	Nuts	6	
59	Bearing	1	

Project	Project ID	Created by	Created on	Last update